DES Waste Management Division
29 Hazen Drive; PO Box 95
Concord, NH 03302-0095

REMEDIAL DESIGN PLANS AND CONSTRUCTION SPECIFICATIONS REPORT
DARTMOUTH COLLEGE, RENNIE FARM SITE
HANOVER CENTER ROAD
HANOVER, NEW HAMPSHIRE
NHDES SITE NO. 201111109, DES PROJECT NO. 277737

Prepared For:
Dartmouth College Office of Environmental Health and Safety
37 Dewey Field Road, Suite 6216
Hanover, NH 03755
Phone Number: (603) 646-0235
RP Contact Name: Mr. Michael D. Cimis
Assistant Director of Environmental Health & Safety
RP Contact Email: Michael.D.Cimis@Dartmouth.EDU

Prepared By:
GZA GeoEnvironmental, Inc.
5 Commerce Park North, Suite 201
Bedford, New Hampshire 03110
Phone Number: (603) 232-8732
Contact Name: Mr. James M. Wieck, P.G.
Contact Email: James.wieck@gza.com
GZA Project No. 04.0190030.02

Date of Report: December 2, 2016

Proactive by Design

GEOTECHNICAL
ENVIRONMENTAL
ECOLOGICAL
WATER
CONSTRUCTION MANAGEMENT

5 Commerce Park North
Suite 201
Bedford, NH 03110
T: 603.623.3600
F: 603.624.9463
www.gza.com

Via Email

December 2, 2016
File No. 04.0190030.02

Mr. Paul Rydel, P.G.
New Hampshire Department of Environmental Services
29 Hazen Drive, P.O. Box 95
Concord, New Hampshire 03301

Re: Remedial Design Plans and Construction Specifications Report
Dartmouth College, Rennie Farm Site
Hanover Center Road
Hanover, New Hampshire
NHDES Site No. 201111109, DES Project No. 277737

Dear Mr. Rydel:

GZA GeoEnvironmental, Inc. (GZA) prepared this letter report on behalf of Dartmouth College (Dartmouth), to provide the New Hampshire Department of Environmental Services (NHDES) with additional information regarding the proposed remedial alternative for the Rennie Farm property in Hanover, New Hampshire (site). The remedial alternative for the site was proposed in GZA's Remedial Action Plan[1] (RAP) dated September 1, 2016, and includes groundwater extraction and on-site treatment of 1,4-dioxane contaminated groundwater. The RAP was approved by NHDES in in its letter[2] dated September 27, 2016.

This letter report includes information required under State of New Hampshire Code of Administrative Rules Env-Or 606.16 (Design Plans and Construction Specifications), as applicable. In addition, responses to NHDES's comments included in its September 27, 2016 letter are provided.

REMEDIAL OBJECTIVES

The remedial objectives of the groundwater extraction and treatment systems include capture and treatment of 1,4-dioxane contaminated groundwater within the former animal carcass burial area, and removal of 1,4-dioxane from groundwater within soil and bedrock proximate and downgradient of the former animal carcass burial area. The remedial design includes use of infiltration galleries within the

[1] Report by GZA titled "*Remedial Action Plan Report, Dartmouth College, Rennie Farm Site, Hanover, New Hampshire, NHDES Site No. 201111109, DES Project No. 277737*."

[2] Letter by NHDES titled "*Hanover – Dartmouth College Rennie Farm Site, Hanover Center Road, DES Site #201111109, Project #27737, Report – Remedial Action Plan, prepared by GZA GeoEnvironmental, Inc. (GZA), and dated September 1, 2016*."

source area to flush retained pore water and, if present, mobilize 1,4-dioxane on soil to groundwater for capture and treatment. The remedial objectives/design are focused on prevention of further transport of 1,4-dixoane from the site, thereby limiting future off-site transport of 1,4-dioxane and the potential for capture of 1,4-dioxane by water supply wells.

REMEDIAL SYSTEM DESCRIPTION

This section provides a description of the groundwater extraction and treatment systems including information required under Env-Or 601.16. **Revised plans** illustrating the systems are attached; a **plan set** prepared by Emerging Compounds Treatment Technologies (ECT) is also attached. Please note that, due to the desired schedule for startup of the system during the first week of January 2017, certain remedial system components have been or are currently being constructed, as noted in the description of the components. Importantly, the design of the system assumes an observational approach so that potential modifications could be made in the future to meet the remedial objectives including:

- The number and location of wells;
- Pump type and flow rate; and
- Total system flow rate and treatment system capacity.

The layout of the primary components of the groundwater extraction and treatment systems are illustrated on **Sheet 1** and **Sheet 2**, and include:

- Seven overburden groundwater extraction wells installed at the locations illustrated on **Sheet 2**. The locations of the wells are based on the estimated direction of 1,4-dioxane transport in overburden groundwater and elevation of the bedrock surface. Each well has been constructed using 6-inch internal diameter PVC including a sump installed within bedrock, such that the pump intake can be constructed approximately 1 foot below the top of bedrock. Wells have been screened within the overburden and highly weathered bedrock. Each well will be equipped with a pneumatically driven level maintaining pump.
- Five bedrock groundwater extraction wells installed at approximately the locations illustrated on **Sheet 1** and **Sheet 2**. Wells will consist of approximately 6-inch-diameter open bedrock borings with casings seated into bedrock. Each well will be equipped with a pneumatically driven level maintaining pump. Subsurface conduit will be installed to provide for future use of level controlled electric submersible pumps based on observed well yield and flow rate needed to meet the performance goals.
- Underground piping between the groundwater extraction wells and treatment system and between the treatment system and discharge locations (see **Sheet 3** for details).
- A groundwater treatment system (see **Sheet 2**, **Sheet 3**, and **ECT Plan Set**) to remove 1,4-dioxane from groundwater. The treatment system will include pretreatment to remove total iron and manganese consisting of bag filters and granular activated carbon. Pretreatment is intended to limit the fouling of the treatment system. Treatment of 1,4-dioxane will be by absorption using Ambersorb media. The treatment system will be designed for an influent flow rate of 15 gallons per minute (gpm), and will be expandable to 25 gpm. The system includes periodic steam regeneration of the Ambersorb media to remove the 1,4-dioxane. The resulting condensate will be periodically disposed of off site.

- A crushed stone pad to support the aboveground components of the groundwater extraction and treatment systems (see **Sheet 2**). The pad will be enclosed within an 8-foot-high chain-link fence. Components within the pad area include: two Conex boxes housing groundwater extraction and treatment equipment (see **Sheet 3** for interior details); a 55-KW generator used to supplement a 200-amp electrical service during regeneration of the Ambersorb media; a 1,000-gallon propane tank used to fuel the 55-KW generator and a boiler also used during Ambersorb regeneration; and an air dryer and chiller used to support the treatment system. The generator, propane tank, air dryer, and chiller will be placed on concrete pads constructed within the crushed stone pad.

- A primary treated water discharge point (see **Sheet 1** and **Sheet 2**). The discharge will be made into a subsurface rip rap constructed area up slope of the intermittent stream located on-site and downgradient of the source area.

- A secondary treated water discharge consisting of two approximately 50-foot by 50-foot leaching galleries constructed using leaching chambers (see **Sheet 1**). The intent of the secondary discharge system is to flush treated water through the saturated zone to accelerate the removal of dissolved-phase 1,4-dioxane. Based on mounding evaluations performed by GZA, the estimated total discharge capacity of the infiltration galleries is approximately 1 gpm. The actual infiltration rate will be maximized as allowed by the subsurface conditions and the need to capture groundwater within the source area. The infiltration galleries will be used following the startup of the treatment system to allow for documentation of groundwater capture by the system. We anticipate construction of the infiltration galleries during early 2017 with potential initial use during April 2017.

- A dry well will be used to discharge approximately 33 gallons of boiler blow down water per regeneration cycle. Anticipated boiler blow down water quality is summarized in the following table.

pH	8.0-11.4
Sulfite (ppm)	20 to 60
Conductivity (us/cm)	2,000 - 3500
P-Alk (ppm as CaCO3)	85-410
T-Alk (ppm as CaCO3)	200-500
Chlorides (ppm)	<250
Hardness (ppm as CaCO3)	8 - 85

The dry well location is illustrated on **Sheet 2**.

DESIGN PLANS AND CONSTRUCTION SPECIFICATIONS

The following provide applicable information required under Env-Or 606.16 (Design Plans and Construction Specifications). The information is provided in the order listed in Env-Or 606.16.

(1) A description of the purpose and function of the remedial treatment system or source removal project;

Please see Remedial Objectives section for this discussion.

(2) A list of applicable design criteria for the remedial treatment system or source removal project including, but not limited to:

a. Site limitations;

Site limitations include: relatively remote location; topography (>200-foot change in elevation within 1,4-dioxane transport area); limited access to electrical service (limited to 200-amp single phase service). Roadway construction and construction of an electrical service and supplemental electrical power through use of a generator required to construct and operate the proposed remedial system.

Low hydraulic conductivity site soils and the fractured bedrock also represent site limitations.

b. Physical properties of the soil and aquifer;

Refer to RAP for detailed information. Site hydrogeology includes glacial till (geometric mean K = 6.88×10^{-5} cm/sec) overlying fractured bedrock. Bedrock fractures generally steeply dipping and oriented to the northeast.

c. Space restrictions;

None

d. Subsurface obstacles, barriers, or both;

Boulders within glacial till.

e*. Noise restrictions;*

Town of Hanover ordinance[3] requires maximum permissible weighted sound level measured at the adjoining property line to be 60 decibels (7 am to 7 pm) and 50 decibels (7 pm to 7 am).

f. Air and water discharge permit requirements;

Issuance by NHDES of a State of New Hampshire Temporary Groundwater Discharge Permit required for discharge of treated groundwater to infiltration galleries; authorization to discharge under the United States Environmental Protection Agency (EPA) Region 1 Remediation General Permit (RGP) required for discharge of treated groundwater to the primary discharge point.

g. Remedial treatment system flow rates; and

Estimated treatment system flow rate ranges from 10 gpm to 15 gpm. System is expandable to 25 gpm, if needed. Based on the site conditions and project schedule, an observational approach to total flow and individual well flow rates is necessary.

[3] Section 514.1 of Section 514 (Noise Standards) of Town of Hanover Zoning Ordinance 2016, dated May 10, 2016.

The estimated system flow rate of 10 gpm to 15 gpm considers the results of the constant head withdrawal test of well GZ-14L, which demonstrated a drawdown of 2.3 feet at a distance of 44 feet from the pumping well with a withdrawal rate of 1.5 gpm, the geometric mean source area overburden hydraulic conductivity of 6.88×10^{-5} cm/sec, and our experience at similar sites. In general, we have assumed a yield, on average, of 0.5 gpm for each of the seven overburden groundwater extraction wells and 2 gpm for each of the five bedrock groundwater extraction wells.

h. Remedial treatment system efficiency;

Not applicable.

(3) Remedial treatment system performance standards;

Treatment system performance standards include:

- State of New Hampshire Ambient Groundwater Quality Standards (NH AGQS);
- A laboratory reporting limit of 0.25 micrograms per liter (ug/L) for 1,4-dioxane using EPA Method 8260 SIM; and
- Effluent Limitations to be included with the EPA authorization to discharge under the RGP.

(4) Characteristics, quantities, and locations of environmental media and contaminants to be treated or removed;

The media to be treated is groundwater. The quantity to be extracted and treated will be a function of the time to meeting the remedial objectives. 1,4-dioxane is the only site-related contaminant of concern. Low, below AGQS, concentrations of other volatile organic compounds have been detected (please refer to the RAP for additional information).

(5) Expected waste products that will be generated and their means of disposal;

Liquid phase granular activated carbon (LGAC) containing 1,4-dioxane from regeneration of the Ambersorb media is the only anticipated waste that will be generated. Each change out of LGAC results in a volume of approximately 7 cubic feet of material for disposal. ECT preliminarily estimates approximately seven changeouts of the LGAC per year (to be refined based on startup and operational data). Disposal will be off site with the location and method based on the results of waste characterization profiling of the media.

(6) Pilot test results used in the preparation of the design;

The treatment system is under construction and has not been pilot tested. However, the remedial technology (filtration using Ambersorb media) has been successfully used for the removal of 1,4-dioxane from groundwater to concentrations below 0.25 ug/L. The regeneration frequency of the media can be varied based on flow rate, influent concentration, and performance monitoring to increase removal efficiency.

(7) Manufacturer's data describing the equipment in the design.

Please refer to attached ECT plan set.

(b) Construction plans and specifications required pursuant to Env-Or 606.15(b) shall provide sufficient detail for construction of the remedial system or source removal project.

Please refer to attached **Sheet 1 through Sheet 3** and **ECT plan set**.

CONSTRUCTION SCHEDULE

As noted above, certain components of the remedial system have been or are under construction to meet the startup schedule. Work completed at this time includes:

- Construction of the crushed stone and concrete pads;
- Roadway improvements;
- Tree cutting for roadway improvements and excavation;
- Installation of overburden groundwater extraction wells;
- Installation of thee of the five overburden extraction wells; and
- Performance monitoring wells (described in the RAP and illustrated on **Sheet 2**) is ongoing.

Construction of the aboveground components of the groundwater extraction system is ongoing at the site. Construction of the groundwater treatment system components is ongoing off site, with arrival at the site scheduled for December 19, 2016. The electrical service will be constructed during December.

The intent of the schedule is to complete the construction of the system before the end of December 2016.

GZA and Dartmouth understand that startup of the treatment system is contingent on EPA authorization to discharge under the RGP.

RESPONSES TO NHDES COMMENTS

The following subsections provide responses to the comments provided by NHDES in its letter dated September 27, 2016. NHDES comments are included below in *italics* in the order and under the headings in which they appear in NHDES's September 27, 2016 letter providing comment on the RAP.

<u>TECHNICAL COMMENTS AND REQUESTS FOR FURTHER INFORMATION</u>

Bullet #4 under item #1 states that iron and manganese will be removed from groundwater using bag filters and granular activated carbon (GAC) as a pre-treatment step prior to treatment to remove 1,4-dioxane. The Department expects that bag filters may remove only suspended iron and manganese particulates, and that neither the bag filters nor GAC would substantially reduce the concentrations of dissolved iron or manganese. Please discuss.

The bag filters and GAC are intended to remove particulate iron and manganese to limit the potential for fouling of the Ambersorb. We do not anticipate significant precipitation of iron and manganese within the treatment

system between the filtration and the Ambersorb. If iron and manganese fouling becomes problematic relative to operation of the treatment system, iron and manganese sequestration would be added to the system.

The design flow rate for the groundwater treatment system is indicated as 15 gallons per minute (gpm), expandable to 25 gpm. However, there is nothing in the preceding sections that justifies the design flow rate. Please explain the justification for the flow rate.

The design flow rate considers the results of the constant head withdrawal test of well GZ-14L, which demonstrated a drawdown of 2.3 feet at a distance of 44 feet from the pumping well with a withdrawal rate of 1.5 gpm, the geometric mean source area overburden hydraulic conductivity of 6.88×10^{-5} cm/sec, and our experience at similar sites. In general, we have assumed a yield, on average, of 0.5 gpm for each of the seven overburden groundwater extraction wells and 2 gpm for each of the five bedrock groundwater extraction wells.

Importantly, due to the expedited nature of the remedial program, and uncertainty inherently associated with groundwater flow within fractured bedrock, implementation of the groundwater extraction and treatment assumes an observational approach with potential modification of the groundwater extraction and/or treatment system components as needed to achieve the remedial objectives.

The Department assumes that the specifications and sizing of the Ambersorb contactors are based on adsorption of the 1,4-dioxane; please confirm/discuss.

The specifications and sizing of the Ambersorb contactors are based on an average influent concentration of 26 ug/L (Bulk Source Area-1 sample; see Section 3.6 [Hydraulic Testing]) and an influent flow rate of 15 gallons per minute. The Bulk Source Area-1 sample represents the 1,4-dioxane concentration in a 250-gallon container of water purged from source area well GZ-14L during hydraulic testing. Importantly, the regeneration rate, assumed weekly, of the Ambersorb vessels can be varied to accommodate various influent flow rates and 1,4-dioxane concentrations.

Bullet #6 calls for a treated water discharge to filtration beds. The total discharge capacity of the infiltration galleries is indicated to be "approximately 1 gpm" and is reported to be based on an evaluation of groundwater mounding. The two beds each have an area of 2,500 square feet (SF), for a total area of 5,000 SF. The stated 1 gpm capacity for the 5,000 SF infiltration galleries thus equates to less than 0.3 gallons per day per square foot, and appears low. However, since the primary discharge point for the treatment system is indicated to be the intermittent stream to the east of the source area (discharge to be permitted under a Remediation General Permit [RGP] from the US Environmental Protection Agency [USEPA]), the Department assumes that treated effluent flows will be adjusted to maximize the discharge capacity of the infiltration galleries (?); please discuss.

The treated flows to the infiltration galleries will be adjusted to maximize the amount of treated water infiltrated within the source area as limited by groundwater mounding and the maintenance of the groundwater capture zone. The water levels within the existing monitoring wells and performance monitoring well network illustrated on **Sheet 2** will be monitored for evidence of mounding and documentation of maintenance of the groundwater capture zone.

No estimation of the mass of 1,4-dioxane to be removed in the treatment system is provided in the report. How were the sizes of the Ambersorb contactors determined and the frequency of steam regeneration estimated without an estimate for the mass of 1,4-dioxane being removed per day/week/month?

As noted above, the specifications and sizing of the Ambersorb contactors are based on an average influent concentration of 26 ug/L (Bulk Source Area-1 sample; see Section 3.6 [Hydraulic Testing]) and an influent flow rate of 15 gallons per minute. The Bulk Source Area-1 sample represents the 1,4-dioxane concentration in a 250-gallon container of water purged from source area well GZ-14L during hydraulic testing. Importantly, the regeneration rate, assumed weekly, of the Ambersorb vessels can be varied to accommodate various influent flow rates and 1,4-dioxane concentrations.

Additional investigations should include estimating the individual well yields for the recovery wells and an overall flow to the treatment system.

Estimation of the individual well yields will be completed during the startup of the system.

With regard to Figure 9 (Proposed Groundwater Extraction and Treatment System Layout), it appears the proposed most-northerly "plume" bedrock extraction well (separated from the other wells) is to be installed in the vicinity of existing monitoring well GZ-9. For clarity, Figure 9 should include a detail to show the new well's specific location and its proximity to well GZ-9; please provide. Also, it appears the treatment equipment is to be installed on a concrete pad; please confirm. Note that the concrete pad, if installed, will require provisions for handling stormwater.

The proposed "plume" bedrock groundwater extraction well is located approximately 100 feet southwest of monitoring well triplet GZ-9U/L/D. The proposed well location is illustrated on attached **Sheet 1**.

The final design of the pad to support the above ground components of the groundwater extraction and treatment systems includes an approximate 70-foot by 55-foot compacted stone and geotextile pad. The larger Conex boxes for the groundwater extraction and treatment components will be placed directly on the stone pad. Four small concrete pads will be constructed to support a generator, chiller, air dryer, and propane tank. The four small concrete pads sit within the larger stone pad as illustrated on **Sheet 2**.

With regard to Figure 10 (Proposed Groundwater Treatment System Details/Equipment Plan):

o Please provide an index for the letter symbols used in the instrumentation;

Please see ECT **Sheet P-100** for the requested index.

o Tank 5300 is identified as a NAPL container storing the desorbed 1,4-dioxane. Please show how the liquid dioxane is transferred into the tank;

The NAPL container has been eliminated from the design. The desorbed 1,4-dioxane will be stored in the T-5000 Decanter/Condensate tank (see ECT **Sheet E-102**)

o ECT2 appears to have designed the treatment system and layout. Please confirm; and note that the plans will need to be stamped by a NH-licensed Professional Engineer (P.E.);

ECT designed the treatment system. Please refer to ECT **Sheet E-102** for the required NH-licensed Professional Engineer (P.E.) stamp.

o Figure 11 (see comments below) shows an air compressor to operate the extraction wells, but the air compressor is not shown on Figure 10. Where is the compressor to be located? Also, please show the air lines to the wells;

Please refer to **Sheet 3** for the location of the compressor and air lines.

o Figure 10 shows P1001 sump pump. It is assumed the pump is to pump spillage from the containment around the bag filters. Where does the discharge go? It is not shown in Figure 11; and,

The sump pump is not needed and has been removed (see ECT **Sheet E-102**).

o Figure 11 indicates that the discharge from the Ambersorb contactors is directed to a treated water tank, and then pumped to the infiltration galleries or to a discharge point on the brook. There is no treated water tank shown in Figure 10 or a pump to discharge water to the infiltration beds from the tank.

The treated water tank and discharge pump are located in the groundwater treatment system Conex box (see **Sheet 3**).

With regard to Figure 11 (Proposed Remedial System Process Diagram):

o The condensate pump is shown to discharge to LGAC1, and LGAC2 is also shown as discharging to LGAC1. This appears to be in error (i.e., there is no discharge shown out of LGAC1). Please confirm;

The arrow was shown in the wrong direction between LGAC1 and LGAC2; this has been corrected as shown on ECT **Sheet P-102**.

o The Bag Filters discharge to LGAC pretreatment, but no discharge from LGAC pretreatment is shown. Please revise the figure;

The arrow was shown in the wrong direction between Bag Filters and LGAC Pretreatment, this has been corrected in revised, as shown on ECT **Sheet P-102**.

o Tank 5300, NAPL Container, is shown in Figure 10 but not in Figure 11. It is assumed that this tank will hold the desorbed 1,4-dioxane. Please confirm and, if so, please show the method that will be used to place 1,4-dioxane into the tank;

No NAPL is anticipated and therefore T-5300 has been eliminated, see ECT **Sheet-E-102**.

o The Dry Cooler pump is shown in Figure 10 but not in Figure 11. Please revise; and,

Please see ECT **Sheet P-102** for the requested revision.

o Please label, or show in the symbol panel, the steam lines, water softener lines, and groundwater treatment lines. To maintain consistency, please show discharge from lag Ambersorb vessel in blue.

Please see ECT **Sheet P-102** for the requested revisions.

ADDITIONAL CHARACTERIZATION OF BEDROCK HYDROGEOLOGIC CONDITIONS

Responding to the following NHDES comment and inquiry regarding the status of the previously-proposed geophysical logging and discrete-zone sampling of the #9 Rennie Road well.

As stated in Section 4.6.2, the Department understands that geophysical logging has not yet been completed at the #9 Rennie Road bedrock supply well. As such, key factors such as the depth of the contributing fractures and total well depth are not yet known for this well. Accordingly, as noted in Section 4.6.2 of the report, we concur that geophysical logging and discrete-zone sampling of the #9 Rennie Road well are needed. Please provide an update at to the status of these previously-proposed activities.

On behalf of Dartmouth College, GZA reiterated our request for access to perform the geophysical logging and discrete-zone sampling of the #9 Rennie Road well in an email communication on October 5, 2016. The property owners responded in an email communication on October 7, 2016 that they were still unwilling to grant access to the well.

ERRATA AND TEXT CORRECTIONS

Responding to the comments under the Errata and Text Corrections section of NHDES September 27, 2016 letter.

Consistent with the prior reporting, the RAP Report refers to a total of 43 historical burial plots that we [sic] *previously excavated as part of the prior remedial efforts. However, based on the historical documentation provided (Appendix E), it appears that 42 plots were historically used at the site. Please clarify.*

Please refer to **Figure 1** for the location of burial plot 43.

Under Section 3.2 (Source Area Groundwater Screening), the reported concentrations of 1,4-dioxane detected in the groundwater samples collected from the direct-push (GZG-series) sampling points is indicated to range up to 660 ug/l (at GZG-11). Based on the data provided on Figure 6 and the laboratory reports in Appendix D, it appears that the highest concentration (670 ug/l) was found in the groundwater sample from GZG-23. Please confirm.

The highest concentration of 1,4-dioxane detected was 670 ug/L.

In Section 3.5.3 (and 4.7), the 1,4-dioxane concentration recently detected in the surface water sample collected from the "Stream-3" sampling location is reported as 5.2 ug/l; the Department understands that the correct value is 0.52 ug/l. Please confirm.

The detected concentration of 1,4-dioxane in the referenced sample collected from surface water sampling location Stream-3 is 0.52 ug/L.

Under Section 3.6 (Hydraulic Testing), the constant head test is indicated to have been performed on overburden monitoring well GZ-14U; also, the twelfth bullet point under Section 5.0 (Conclusions) states that the constant head was performed on bedrock well GZ-20L. The Department believes the references should be to bedrock well GZ-14L as the pumping well used for the constant head test. Please confirm.

The constant head test was performed on well GZ-14L.

Bullet item #3 in Section 6.0 (Recommendation) discusses monitoring wells to be installed and shown on "Figure 13." This appears to refer to Figure 12. Please confirm.

The correct figure reference within the RAP is Figure 12. The monitoring wells described in the bullet item #3 in Section 6.0 have been amended as described in GZA's September 28, 2016 Work Plan Addendum[4] and shown on the attached **Figure 2**.

We appreciate your review of this letter and look forward to receiving any comments you may have. Should you have any questions, please do not hesitate to contact Mr. James M. Wieck at 603-232-8732.

Very truly yours,

GZA GEOENVIRONMENTAL, INC.

James M. Wieck, P.G.
Senior Project Manager

Ronald A. Breton, P.E.
Senior Principal, Consultant/Reviewer

Steven R. Lamb, P.G., C.G.W.P.
Principal

JMW/SRL/RAB:kr
p:\04jobs\0190000s\04.0190030.00\04.0190030.02\report\remedial design report\draft 04 190030 02 remeidal design report 112216.docx

Attachments: Sheets
Figures
Plan Set by ECT

cc: Ms. Maureen O'Leary, PhD, MBA, CBSP, Dartmouth College
Mr. Michael D. Cimis, CIH, CHMM, Dartmouth College
Ellen Arnold, Esq., Dartmouth College

[4] Work Plan by GZA titled "*Work Plan Addendum, Supplemental Hydrogeologic Investigation – Phase II, Groundwater Management Zone Delineation, Dartmouth College, Rennie Farm Site, Hanover, New Hampshire, NHDES Site No. 201111109, DES Project No. 277737.*"

Sheets

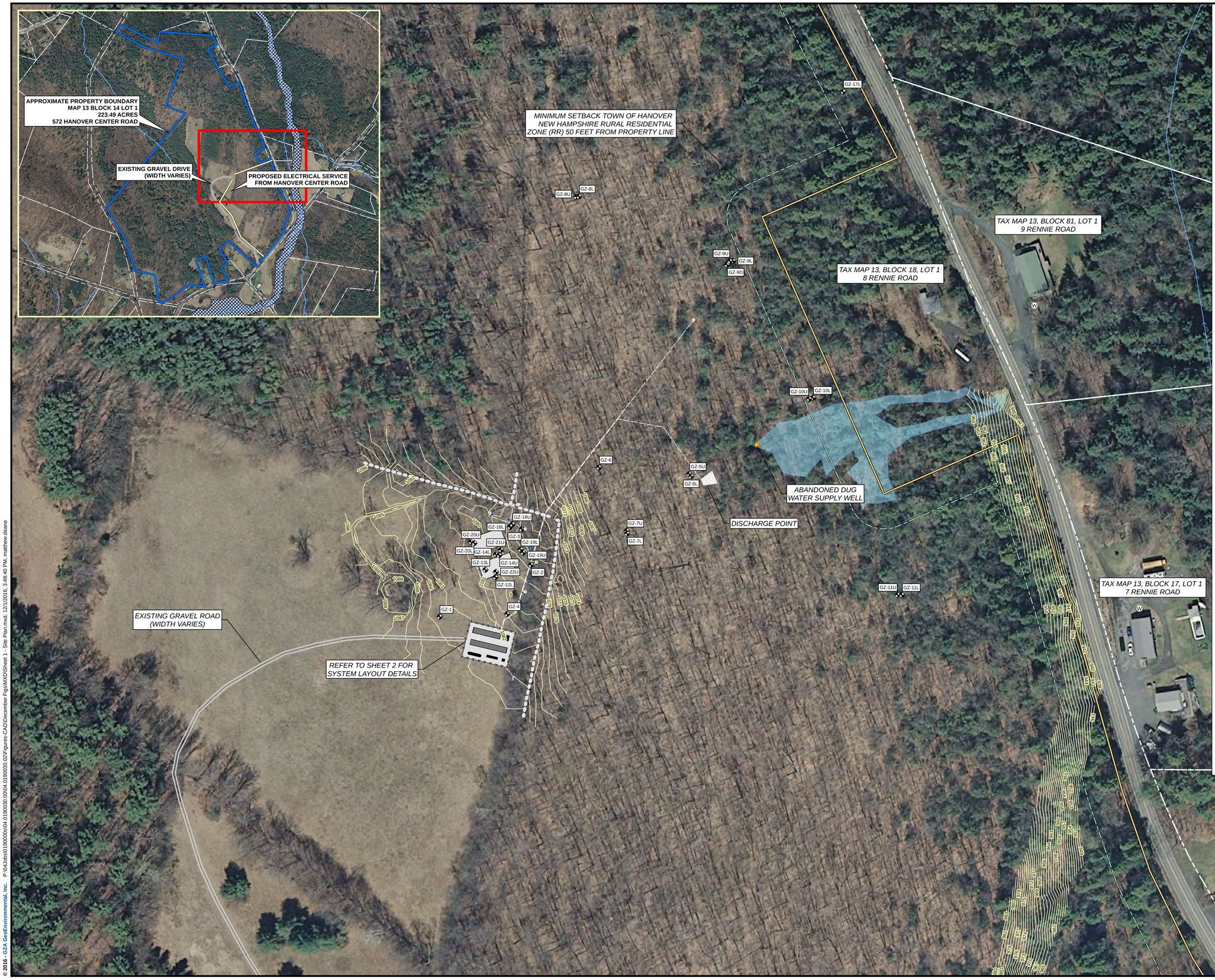

LEGEND:

- GZ-1 — GROUNDWATER MONITORING WELL
- W — WATER SUPPLY WELL
- INTERMITTENT/PERENNIAL STREAM; ARROW INDICATES DIRECTION OF SURFACE WATER FLOW
- APPROXIMATE PROPERTY BOUNDARY (SEE LOCUS)
- LOCATION OF INTERMITTENT STREAM
- MINIMUM SETBACK TOWN OF HANOVER NEW HAMPSHIRE RURAL RESIDENTIAL ZONE (RR) 50 FEET FROM PROPERTY LINE
- APPROXIMATE RENNIE FARM PROPERTY BOUNDARY
- FEMA FLOODPLAIN AREA
- GRAVEL DRIVE (APPROXIMATELY 10 FEET WIDE [WIDTH VARIES])
- STONE WALL
- GROUND SURFACE TOPOGRAPHIC CONTOURS (SEE NOTE 2)
- WETLAND

N W E S

0 60 120
SCALE IN FEET

GENERAL NOTES:

1) 2010-2011 1-FT COLOR AERIAL PHOTOS FOR THE TOWN OF HANOVER WERE OBTAINED FROM THE NH GRANIT NEW HAMPSHIRE STATEWIDE GIS CLEARINGHOUSE.

2) LOCATIONS OF MONITORING WELLS GZ-1 THROUGH GZ-23U, WATER SUPPLY WELL WSW-1, DUG WELL (FORMERLY WATER SUPPLY WELL FOR 8 RENNIE ROAD), ONSITE INTERMITTENT STREAM, GROUND SURFACE TOPOGRAPHY WITHIN CERTAIN AREAS OF THE SITE, AND CERTAIN OTHER SITE FEATURES BASED ON SURVEYS BY WSP TRANSPORATION AND INFRASTRUCTURE DURING OCTOBER 2014, JUNE 2015, JANUARY 2016, AND MAY 31, 2016.

NO.	ISSUE / DESCRIPTION	BY	DATE

DARTMOUTH COLLEGE, RENNIE FARM SITE
HANOVER, NEW HAMPSHIRE
NHDES SITE NO. 201111109, PROJECT NO. 277737

SITE PLAN

PREPARED BY:
GZA GeoEnvironmental, Inc.
Engineers and Scientists
www.gza.com

PREPARED FOR:
DARTMOUTH COLLEGE

PROJ MGR: JMW	REVIEWED BY: SRL	CHECKED BY: JMW	SHEET
DESIGNED BY: JMW	DRAWN BY: MJD	SCALE: 1 inch = 60 feet	1
DATE: 12-01-2016	PROJECT NO. 04.0190030.02	REVISION NO.	

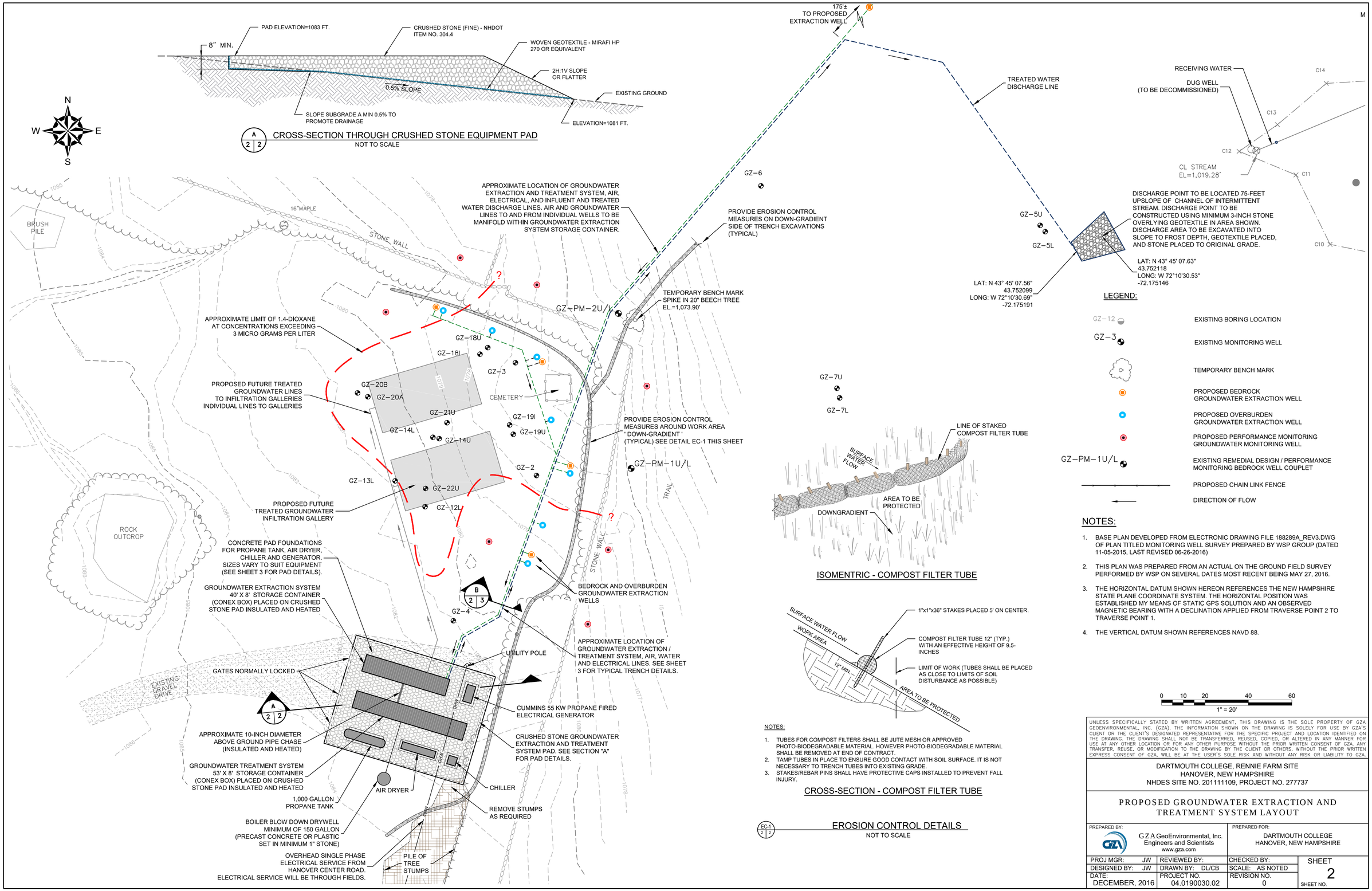

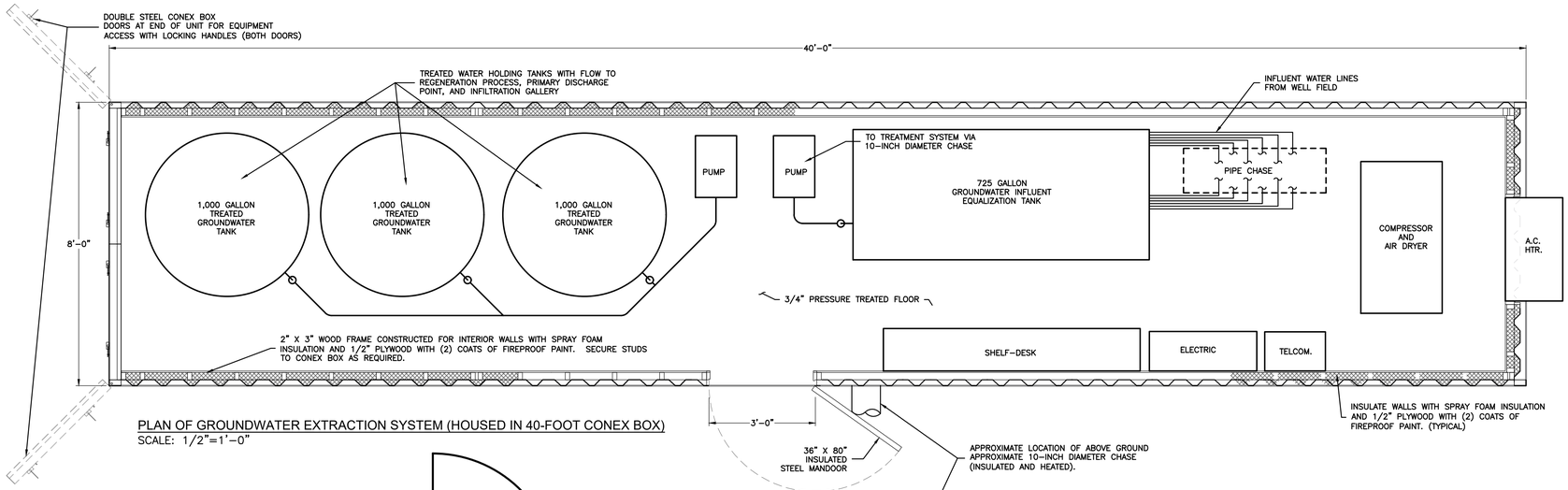

PLAN OF GROUNDWATER EXTRACTION SYSTEM (HOUSED IN 40-FOOT CONEX BOX)
SCALE: 1/2"=1'-0"

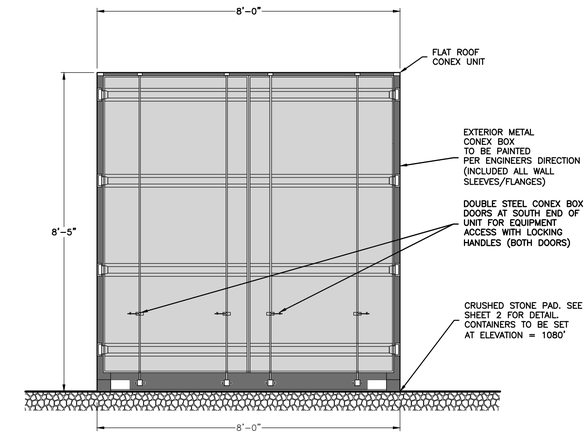

ELEVATION OF SHIPPING CONTAINERS STD. ACCESS DOORS
SCALE: 1/2"=1'-0"

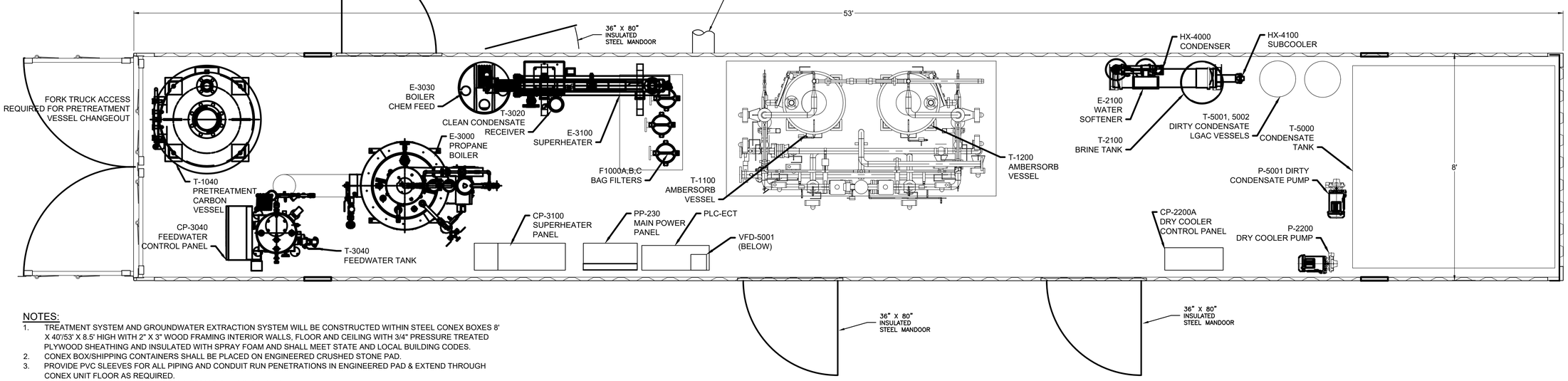

PLAN OF GROUNDWATER TREATMENT SYSTEM (HOUSED IN 53-FOOT CONEX BOX)
SCALE: 1/2"=1'-0"

NOTES:

1. TREATMENT SYSTEM AND GROUNDWATER EXTRACTION SYSTEM WILL BE CONSTRUCTED WITHIN STEEL CONEX BOXES 8' X 40'/53' X 8.5' HIGH WITH 2" X 3" WOOD FRAMING INTERIOR WALLS, FLOOR AND CEILING WITH 3/4" PRESSURE TREATED PLYWOOD SHEATHING AND INSULATED WITH SPRAY FOAM AND SHALL MEET STATE AND LOCAL BUILDING CODES.
2. CONEX BOX/SHIPPING CONTAINERS SHALL BE PLACED ON ENGINEERED CRUSHED STONE PAD.
3. PROVIDE PVC SLEEVES FOR ALL PIPING AND CONDUIT RUN PENETRATIONS IN ENGINEERED PAD & EXTEND THROUGH CONEX UNIT FLOOR AS REQUIRED.
4. ALL PIPING TO BE 8" MINIMUM FROM INTERIOR BUILDING WALLS.
5. PLYWOOD TO BE PAINTED WITH (2) COATS OF FIRE RETARDANT PAINT, 'BURN BARRIER 20-20, INTERIOR FIRE RETARDANT PAINT, FIRE HAZARD CLASSIFICATION, CLASS A, AS MANUFACTURED BY FIRE RETARDANTS,INC. CHASKA, MN OR EQUAL.
6. ALL WIRING SHALL BE RUN IN CONDUIT (EMT) SURFACE MOUNTED UNLESS OTHERWISE REQUIRED.
7. CAP ALL UNUSED SLEEVES. SEAL AROUND ALL CONDUIT AND PIPE PENETRATIONS WITH FLEXIBLE EPOXY FOAM.
8. SEAL AROUND ALL WALL PENETRATIONS WITH EPOXY.

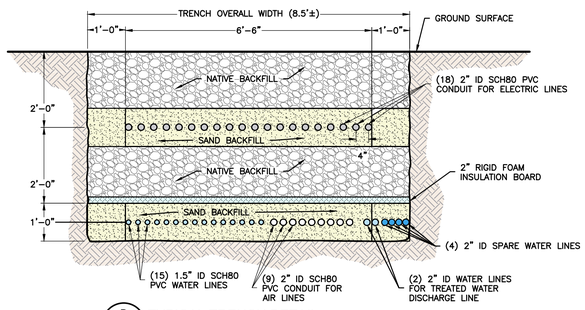

B / 2 3 TYPICAL TRENCH DETAIL
SCALE: 1/2"=1'-0"

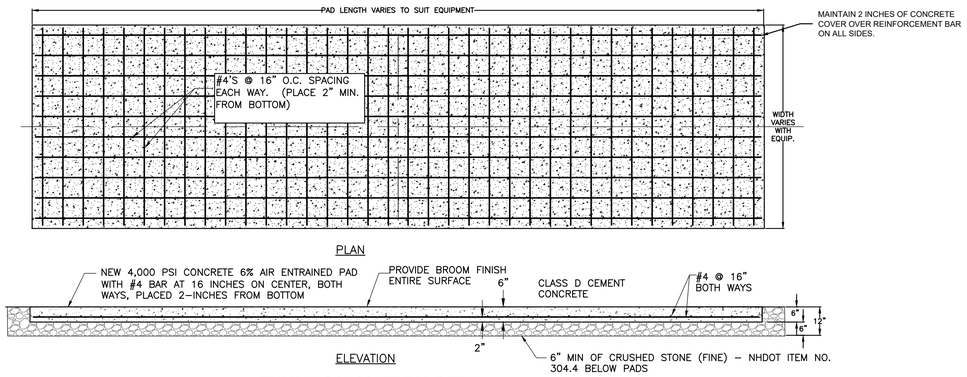

TYPICAL CONCRETE PAD DETAIL
NOT TO SCALE

REMEDIAL ACTION PLAN
DARTMOUTH COLLEGE, RENNIE FARM SITE
HANOVER, NEW HAMPSHIRE
NHDES SITE NO. 201111109, PROJECT NO. 277737

PROPOSED GROUNDWATER EXTRACTION &
TREATMENT SYSTEM EQUIPMENT PLANS & DETAILS

PREPARED BY:
GZA GeoEnvironmental, Inc.
Engineers and Scientists
www.gza.com

PREPARED FOR:

PROJ MGR: JW	REVIEWED BY:	CHECKED BY:	SHEET
DESIGNED BY: JW	DRAWN BY: DL/CB	SCALE: AS NOTED	3
DATE: DECEMBER, 2016	PROJECT NO. 190030.02	REVISION NO. 0	SHEET NO. 3 OF 3

Figures

LEGEND:

- GZ-1 — GROUNDWATER MONITORING WELL
- GZ-21 — SOIL BORING
- APPROXIMATE FORMER LOCATION OF FENCE
- 1000 — GROUND SURFACE TOPOGRAPHIC CONTOURS (SEE NOTE 3)
- LIMITS OF GPR SURVEY (SEE NOTE 3)
- 40 — APPROXIMATE LOCATION OF LABORATORY WASTE BURIAL PIT AND NUMBER (SEE NOTE 6)
- AREA OF GPR AND EM ANOMOLIES AND NUMBER (SEE NOTES 4 AND 5)
- STONE WALL

N W E S

0 10 20 40
SCALE IN FEET

GENERAL NOTES:

1) 2010-2011 1-FT COLOR AERIAL PHOTOS FOR THE TOWN OF HANOVER WERE OBTAINED FROM THE NH GRANIT NEW HAMPSHIRE STATEWIDE GIS CLEARINGHOUSE.

2) APPROXIMATE PROPERTY BOUNDARIES BASED ON REVIEW OF TOWN OF HANOVER, NEW HAMPSHIRE TAX MAP 13, 15, AND 16, DATED APRIL 1, 2015.

3) LOCATIONS OF MONITORING WELLS GZ-1 THROUGH GZ-23U, WATER SUPPLY WELL WSW-1, DUG WELL (FORMERLY WATER SUPPLY WELL FOR 8 RENNIE ROAD), ONSITE INTERMITTENT STREAM, GROUND SURFACE TOPOGRAPHY WITHIN CERTAIN AREAS OF THE SITE, AND CERTAIN OTHER SITE FEATURES BASED ON SURVEYS BY WSP TRANSPORATION AND INFRASTRUCTURE DURING OCTOBER 2014, JUNE 2015, JANUARY 2016, AND MAY 31, 2016.

4) GPR INDICATES GROUND PENETRATING RADAR; EM INDICATES ELECTROMAGNETIC INDUCTION (GEONICS EM61 AND EM31 INSTRUMENTS).

5) THE AREAS OF GPR AND EM ANOMALIES SHOWN HEREON ARE BASED ON SURFICIAL GEOPHYSICAL SURVEYS PERFORMED BY HAGER-RICHTER GEOSCIENCE, INC. OF SALEM, NEW HAMPSHIRE. GPR SURVEYS WERE PERFORMED ON MAY 5 AND MAY 9, 2016 AND THE EM SURVEY WAS PERFORMED ON MAY 27, 2016.

6) THE APPROXIMATE LOCATIONS OF LABORATORY WASTE BURIAL PITS ARE BASED ON A SKETCH TITLED "RADIOACTIVE BURIAL AREA AT RENNIE FARM" AND THE SURVEYED LOCATIONS OF FEATURES ILLUSTRATED ON THE SKETCH INCLUDING A FENCE POST IDENTIFIED AS THE SOUTHWESTERN CORNER OF THE BURIAL AREA FENCE, A FENCE POST ALLOCATED ALONG THE SOUTHERN FENCE LINE, THE HUMAN BURIAL AREA, AND SECTIONS OF STONE WALLS. THE LOCATIONS OF THE LISTED FEATURES IS BASED ON A SURVEYS BY WSP (SEE NOTE 3).

7) LOCATIONS OF GEOPHYSICAL ANOMALY TEST PITS ARE BASED ON LOCATIONS OF ANOMALIES AS LOCATED IN THE FIELD BY WSP AND MEASUREMENTS TO SITE FEATRUES BY GZA.

8) LIMITS OF AUGUST 22-24, 2016 EXCAVATION AREA BASED ON TAPED MEASUREMENTS MADE BY GZA ON AUGUST 24, 2016 TO SITE FEATURES INCLUDED IN WSP TRANSPORTATION AND INFRASTURUCTRE SURVEY ON MAY 31, 2016.

NO.	ISSUE / DESCRIPTION	BY	DATE

REMEDIAL ACTION PLAN
DARTMOUTH COLLEGE, RENNIE FARM SITE
HANOVER, NEW HAMPSHIRE
NHDES SITE NO. 201111109, PROJECT NO. 277737

REVISED FORMER BURIAL AREA PLAN

PREPARED BY:
GZA GeoEnvironmental, Inc.
Engineers and Scientists
www.gza.com

PREPARED FOR:
DARTMOUTH COLLEGE

PROJ MGR: JMW	REVIEWED BY: SRL	CHECKED BY: JMW	FIG
DESIGNED BY: JMW	DRAWN BY: MJD	SCALE: 1 inch = 20 feet	1
DATE: 12-02-2016	PROJECT NO. 04.0190030.02	REVISION NO.	

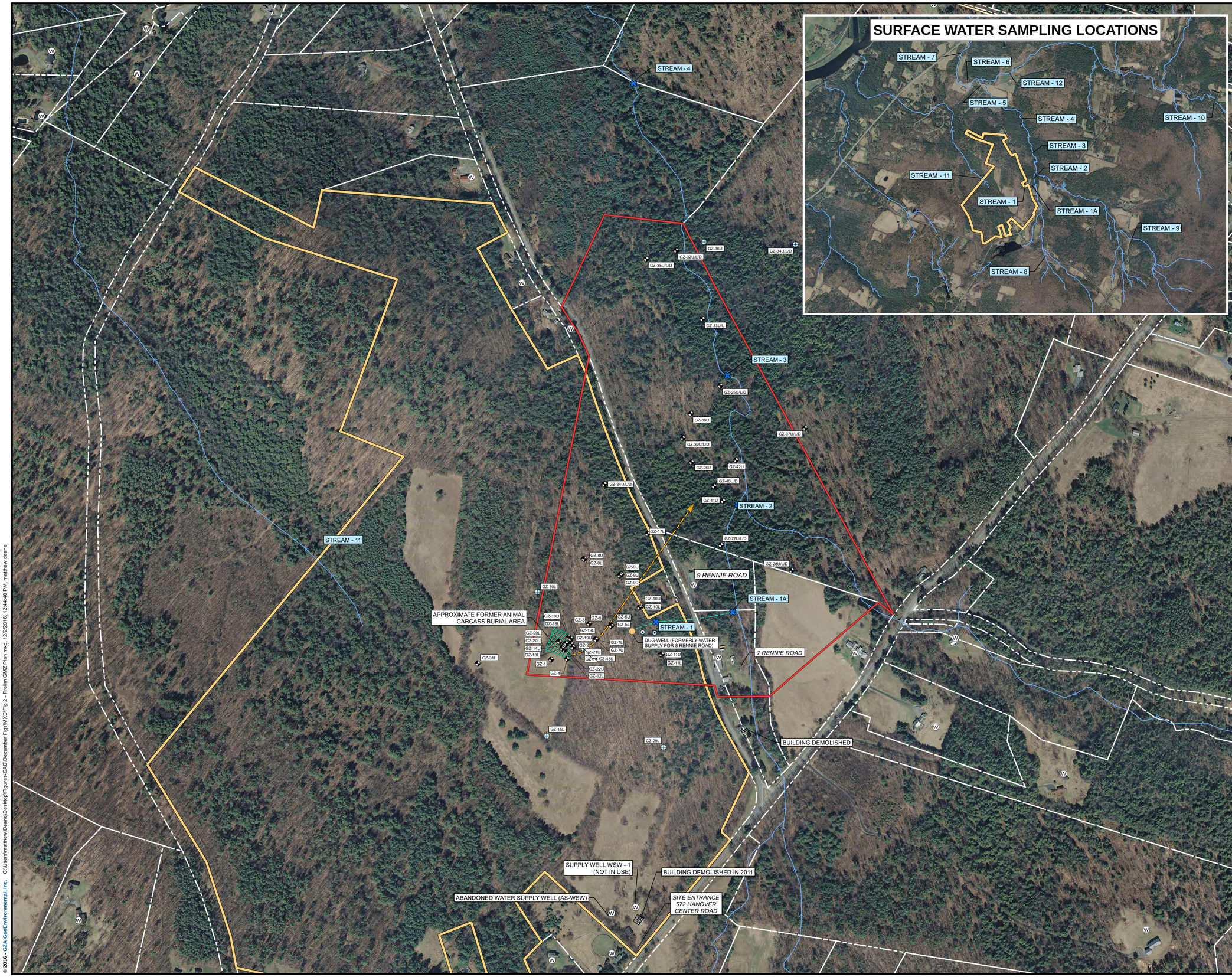

LEGEND:

- ACTIVE DUG WELL
- ABANDONED DUG WELL
- WATER SUPPLY WELL
- GZ-1 GROUNDWATER MONITORING WELL
- SPRING
- STREAM - 1 SURFACE WATER QUALITY MONITORING LOCATION
- INTERMITTENT/PERENNIAL STREAM; ARROW INDICATES DIRECTION OF SURFACE WATER FLOW
- APPROXIMATE PROPERTY BOUNDARY
- LOCATION OF INTERMITTENT STREAM
- TOWN AND/OR STATE BOUNDARY
- GZ-30L GMZ DELINEATION / COMPLIANCE WELL LOCATION - PROPOSED
- POTENTIAL GMZ BOUNDARY
- INFERRED AXIS OF 1,4 - DIOXANE

N W E S

GENERAL NOTES:

1) 2010-2011 1-FT COLOR AERIAL PHOTOS FOR THE TOWN OF HANOVER WERE OBTAINED FROM THE NH GRANIT NEW HAMPSHIRE STATEWIDE GIS CLEARINGHOUSE.

2) APPROXIMATE PROPERTY BOUNDARIES BASED ON REVIEW OF TOWN OF HANOVER, NEW HAMPSHIRE TAX MAP 13, 15, AND 16, DATED APRIL 1, 2015.

3) LOCATIONS OF MONITORING WELLS GZ-1 THROUGH GZ-23U, WATER SUPPLY WELL WSW-1, DUG WELL (FORMERLY WATER SUPPLY WELL FOR 8 RENNIE ROAD), ONSITE INTERMITTENT STREAM, GROUND SURFACE TOPOGRAPHY WITHIN CERTAIN AREAS OF THE SITE, AND CERTAIN OTHER SITE FEATURES BASED ON SURVEYS BY WSP TRANSPORATION AND INFRASTRUCTURE DURING OCTOBER 2014, JUNE 2015, JANUARY 2016, AND MAY 31, 2016.

NO.	ISSUE / DESCRIPTION	BY	DATE

DARTMOUTH COLLEGE, RENNIE FARM SITE
HANOVER, NEW HAMPSHIRE
NHDES SITE NO. 201111109, PROJECT NO. 277737

PRELIMINARY GMZ PLAN/PROPOSED MONITORING WELL LOCATION PLAN

PREPARED BY:
GZA GeoEnvironmental, Inc.
Engineers and Scientists
www.gza.com

PREPARED FOR:
DARTMOUTH COLLEGE

PROJ MGR: JMW	REVIEWED BY: SRL	CHECKED BY: JMW	FIG
DESIGNED BY: JMW	DRAWN BY: MJD	SCALE: 1 inch = 250 feet	2
DATE: 12-02-2016	PROJECT NO. 04.0190030.02	REVISION NO.	

Plan Set by ECT

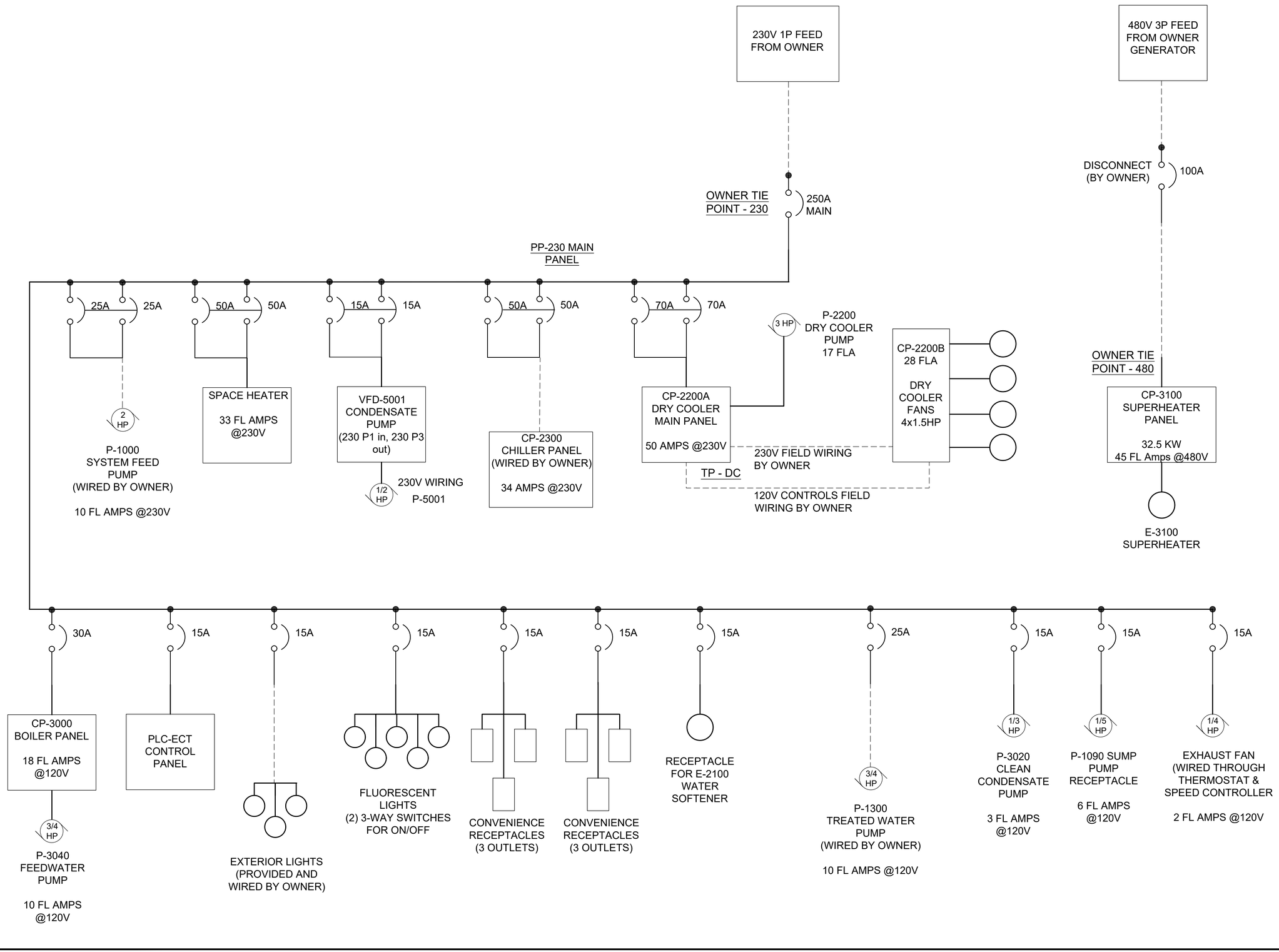

ect2
75 Washington Avenue
Suite 1A
Portland, ME 04101
www.ect2.com

Project No.:	128872
Scale:	N/A
Date:	19 OCTOBER 2016
Drawn By:	CJL
Designed By:	CJL
Checked By:	
Approved By:	

Stamp:

STATE OF NEW HAMPSHIRE
JOHN C. BERRY
No. 10779
LICENSED
PROFESSIONAL ENGINEER

Rev.	Description	By	Date
2	CLIENT ISSUE	ECT	10/27/16
1	ISSUE FOR REVIEW	ECT	10/21/16

GZA
DARTMOUTH COLLEGE
SYNTHETIC MEDIA
GROUNDWATER
TREATMENT SYSTEM

RENNIE FARMS, NH

ELECTRICAL SINGLE LINE DRAWING

E-101

Sheet: 1 of 2

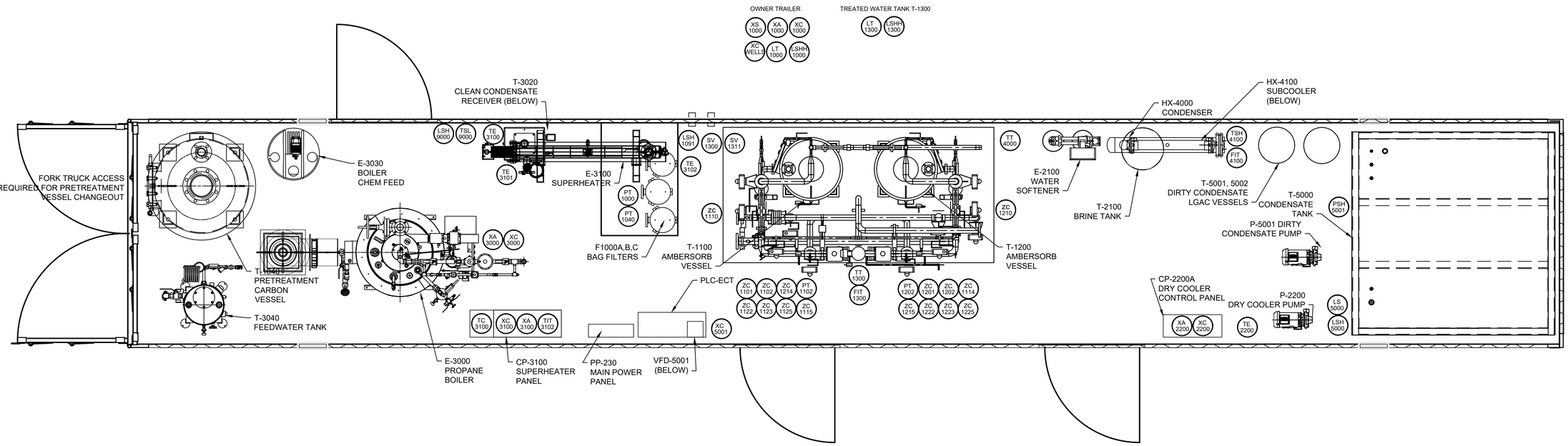

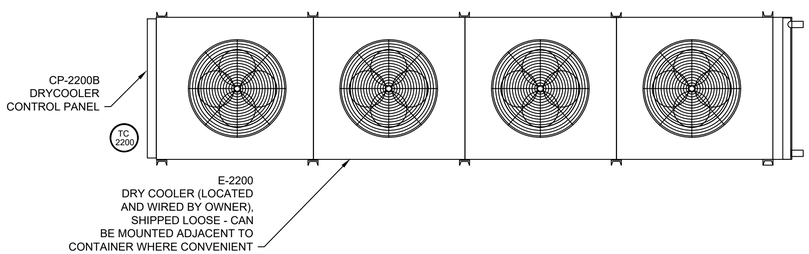

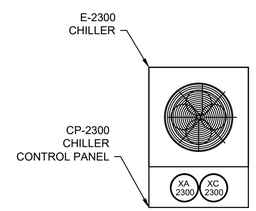

Instrumentation and Controls Cable Schedule - Owner Field Wiring

Identifier Tag	Description	Devcice Power	Signal/Termination	Wiring	IO Type	Wired From	Wired To	factory/ field wired
TC-2200	Dry Cooler Fan Staging Control	120V AC sourced from Drycooler	Control Panel Relay Dry Contacts	(10) #14 THHN	N/A	CP-2200A	CP-2200B	field
XA-2300	Chiller Fault	24V DC sourced from PLC	NC contacts in chiller panel	(2) #14 THHN	DI	PLC-ECT	CP-2300	field
XC-2300	Run command for E-2300 Chiller	24V DC sourced from Chiller	PLC Relay Dry Contacts	(2) #14 THHN	DO	PLC-ECT	CP-2300	field
LSHH-1300	High-High Level in Treated Water Tank T-1300	24V DC sourced from PLC	NC mechanical switch device	(2) #14 THHN	DI	PLC-ECT	Instrument	field
LT-1000	Level in EQ Tank	24V DC Loop Powered	4-20 mA PLC input	TWSP #18	AI	PLC-ECT	Instrument	field
LT-1300	Level in Treated Water Tank T-1300	24V DC Loop Powered	4-20 mA PLC input	TWSP #18	AI	PLC-ECT	Instrument	field
Comm-1	Ethernet to PLC-ECT	N/A	N/A	(2) Cat6 Ethern	N/A	PLC-ECT	Owner Box	field
Spare	Spare Discrete Control Wiring	N/A	N/A	(6) #14 THHN	N/A	PLC-ECT	Owner Box	field
Spare	Spare Analog Control Wiring	N/A	N/A	(2) TWSP #18	N/A	PLC-ECT	Owner Box	field
*XA-GEN	Running feedback for 480V Generator	24V DC sourced from PLC	NO Contacts on Generator	(2) #14 THHN	DI	PLC-ECT	Owner Generator	field
*XC-GEN	Run Command for 480V Generator	120V sourced from Generator	PLC Relay Dry Contact	(2) #14 THHN	DO	PLC-ECT	Owner Generator	field
XA-1000	Running feedback for influent feed pump	24V DC sourced from PLC	NO Contacts on VFD	(2) #14 THHN	DI	PLC-ECT	P-1000	field
XC-1000	Run command for influent feed pump	24V DC sourced from VFD	PLC Relay Dry Contact	(2) #14 THHN	DO	PLC-ECT	P-1000	field
XS-1000	Speed command for influent feed P-1000	24V DC Loop Powered	4-20 mA PLC output	TWSP #18	AO	PLC-ECT	P-1000	field
LSHH-1000	High-High Level in EQ Tank	24V DC sourced from PLC	NC mechanical switch device	(2) #14 THHN	DI	PLC-ECT	Well Control Panel	field
XC-WELLS	Run Permissive for Owner Well Control	120V sourced from Owner Panel	PLC Relay Dry Contact	(2) #14 THHN	DO	PLC-ECT	Well Control Panel	field

Power Wiring Runs - Owner Field Wiring

Voltage (Phase)	Description	Wired From	Wired To	Responsibility
480 (3)	superheater panel power	Owner Disconnect	CP-3100	Owner
230 (1)	Main Power Feed	Owner Feed	PP-230	Owner
230 (1)	Drycooler fan unit power	CP-2200A	CP-2200B	Owner
230 (1)	Chiller power	PP-230	CP-2300	Owner
230 (1)	System feed pump power	PP-230	P-1000	Owner
120 (1)	P-1300 treated water pump	PP-230	P-1300	Owner

NOTES

1. GROUNDING OF MAIN POWER AND BOX BY OWNER.

0 2 4 6
SCALE IN FEET

ect2

Project No.:	128872
Scale:	N/A
Date:	23 AUGUST 2016
Drawn By:	AGB
Designed By:	CJL
Checked By:	
Approved By:	

Stamp:

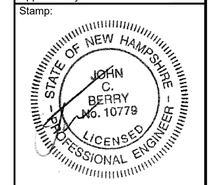

Rev.	Description	By	Date
1	CLIENT ISSUE	ECT	10/27/16

GZA
DARTMOUTH COLLEGE
SYNTHETIC MEDIA
GROUNDWATER
TREATMENT SYSTEM

RENNIE FARMS, NH

OWNER FIELD
WIRING LAYOUT

E-102

Sheet: 2 of 2

SINNETT, MARILYN Printed: 10/28/2016 1:24 PM Layout: E-102
C:\USERS\MSINNETT\DOCUMENTS\DARTMOUTH\LAYOUT\128872-002_M-101-D3_LAYOUT.DWG

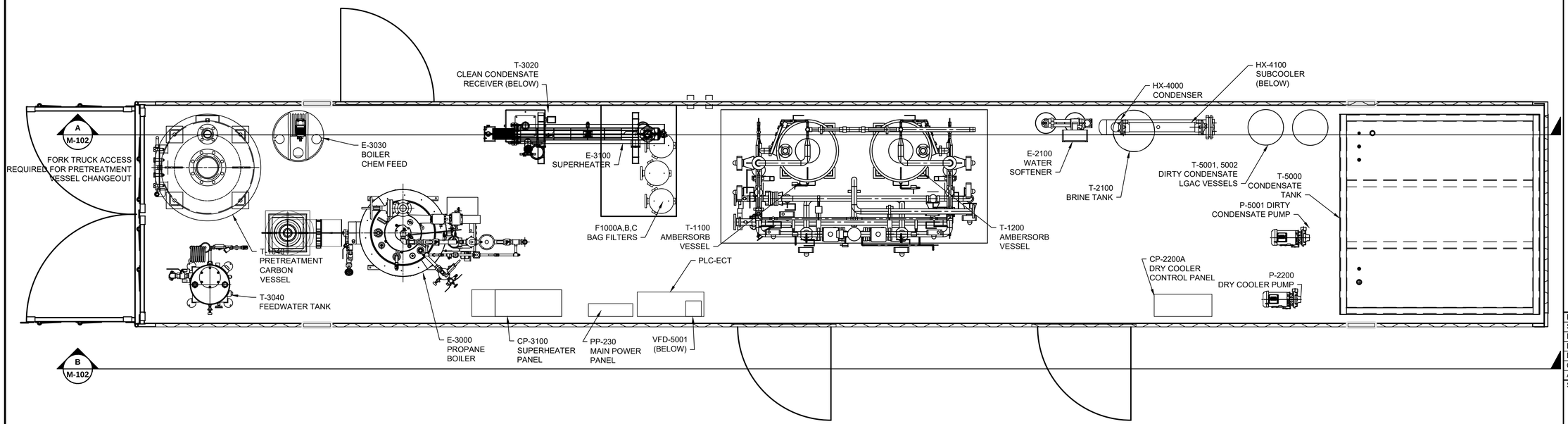

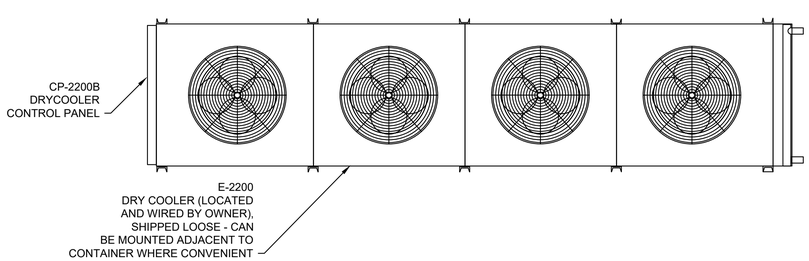

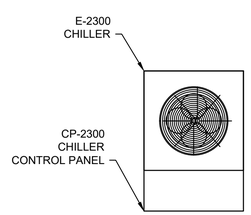

NOTES

1. OUTSIDE DIMENSIONS OF ECT CONTAINER APPROXIMATELY 53' X 8'6"W X 9'6" H
2. CONTAINER GROSS DRY WEIGHT 36,000 LBS
3. CONTAINER GROSS WET WEIGHT 62,000 LBS
4. DRY COOLER GROSS DRY WEIGHT 1,050 LBS
5. CHILLER GROSS DRY WEIGHT 750 LBS
6. LEVEL PAD REQUIRED FOR CONTAINER.

0 2 4 6
SCALE IN FEET

ect2
75 Washington Avenue
Suite 1A
Portland, ME 04101
www.ect2.com

Project No.:	100021-011
Scale:	N/A
Date:	23 AUGUST 2016
Drawn By:	AGB
Designed By:	AGB
Checked By:	
Approved By:	

Stamp:

STATE OF NEW HAMPSHIRE
JOHN C. BERRY
No. 10779
LICENSED
PROFESSIONAL ENGINEER

Rev.	Description	By	Date
5	CLIENT ISSUE	ECT	10/27/16
4	ADDENDUM 1	ECT	10/19/16
3	ISSUE FOR FABRICATION	ECT	10/18/16
2	CLIENT REVIEW	ECT	09/22/16
1	CONCEPT DESIGN	ECT	08/23/16

GZA
DARTMOUTH COLLEGE
SYNTHETIC MEDIA
GROUNDWATER
TREATMENT SYSTEM

RENNIE FARMS, NH

MECHANICAL
EQUIPMENT PLAN
VIEW LAYOUT

M-101

Sheet: 1 of 2

SINNETT, MARILYN Printed: 10/28/2016 1:21 PM Layout: M-101
C:\USERS\MSINNETT\DOCUMENTS\DARTMOUTH\LAYOUT\128872-002_M-101-D3_LAYOUT.DWG

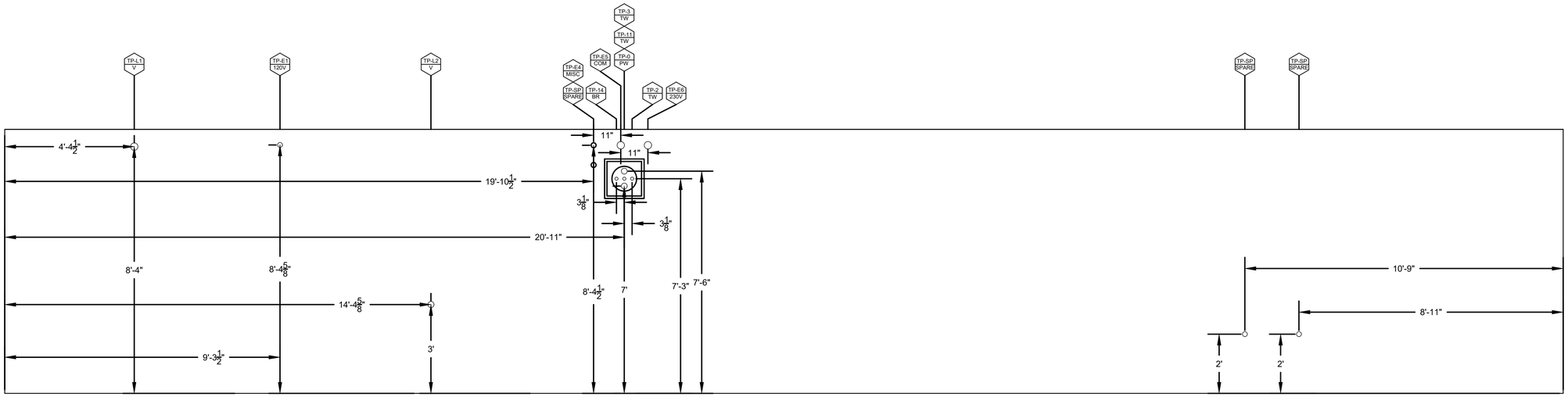

A / M-101 NORTH WALL
SCALE: AS SHOWN

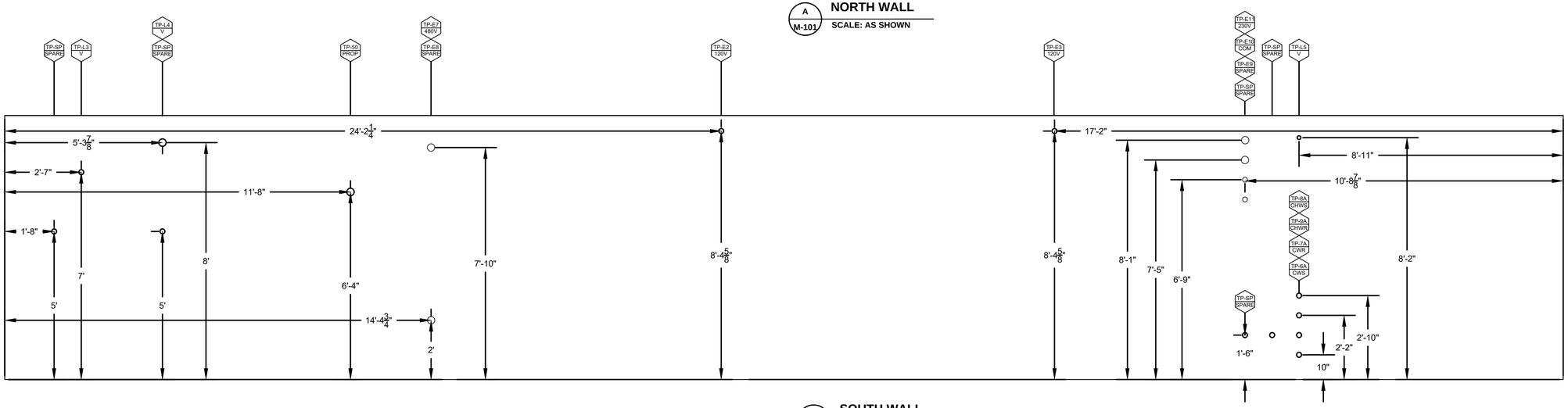

B / M-101 SOUTH WALL
SCALE: AS SHOWN

TIE POINT SCHEDULE

Tie Point	Function	Pipe Size	Nozzle Connection
PROCESS - ECT CONTAINER			
TP-0	Groundwater Influent	2"	2" sch 80 CPVC PE, customer hose through 10" container penetration
TP-2	Treated Water to TW Tank	1"	1" sch 80 CPVC PE, customer hose through 10" container penetration
TP-3	Treated Water to Effluent	2"	2" sch 80 CPVC PE, customer hose through 10" container penetration
TP-6A	Dry Cooler Pump Suction	2"	2" sch 40 threaded coupling, carbon steel
TP-7A	Dry Cooler Return to fan coil	2"	2" sch 40 threaded coupling, carbon steel
TP-8A	To Chiller	1-1/2"	2" sch 40 threaded coupling, carbon steel
TP-9A	From Chiller	1-1/2"	2" sch 40 threaded coupling, carbon steel
TP-11	Treated Water from TW Tank	1"	1" sch 80 CPVC PE, customer hose through 10" container penetration
TP-50	Propane from propane tank	1-1/4"	2" sch 40 sleeve, stainless steel
TP-14	Condensate/Brine to discharge	1"	1" sch 40 SS MNPT, customer hose through 10" container penetration
TP-SP	Spare (Qty: 9)	2"	2" sch 40 threaded coupling, carbon steel
TP-L1	Boiler regulator vent	2"	2" sch 40 sleeve, stainless steel
TP-L2	Clean Condensate Tank Vent	2.5"	2.5" sch 40 threaded coupling, carbon steel
TP-L3	Feedwater tank vent	2"	2" sch 40 threaded coupling, carbon steel
TP-L4	Boiler Safety Relief	3"	3" sch 40 threaded coupling, carbon steel
TP-L5	Dirty condensate tank vent	1.5"	1.5" sch 40 threaded coupling, stainless steel
PROCESS - REMOTE			
TP-6B	Dry Cooler Outlet	2"	2" Connect to Dry Cooler
TP-7B	Dry Cooler Inlet	2"	2" Connect to Dry Cooler
TP-8B	Chiller Inlet	1"	1" Connect to Chiller
TP-9B	Chiller Outlet	1-1/4"	1" Connect to Chiller

TIE POINT SCHEDULE

Tie Point	Function	Pipe Size	Nozzle Material
ELECTRICAL AND CONTROLS			
TP-E1	Exterior Lights	1"	1" sch 40 Threaded Coupling, Galvanized
TP-E2	Exterior Lights	1"	1" sch 40 Threaded Coupling, Galvanized
TP-E3	Exterior Lights	1"	1" sch 40 Threaded Coupling, Galvanized
TP-E4	Misc equipment power wiring	2"	2" sch 40 Threaded Coupling, Galvanized
TP-E5	Controls and ethernet from GZA trailer	3"	3" sch 40 Threaded Coupling, Galvanized
TP-E6	Main 230V Feed to PP-230	3"	3" sch 40 Threaded Coupling, Galvanized
TP-E7	Superheater Panel 480V Feed	3"	3" sch 40 Threaded Coupling, Galvanized
TP-E8	Spare electrical conduit	3"	3" sch 40 Threaded Coupling, Galvanized
TP-E9	Spare electrical near Dry Cooler exit	2"	2" sch 40 Threaded Coupling, Galvanized
TP-E10	Chiller& Dry Cooler Power	3"	3" sch 40 Threaded Coupling, Galvanized
TP-E11	Chiller& Dry Cooler Controls	3"	3" sch 40 Threaded Coupling, Galvanized

0 2 4 6
SCALE IN FEET

ect2
75 Washington Avenue
Suite 1A
Portland, ME 04101
www.ect2.com

Project No.:	100021-011
Scale:	N/A
Date:	23 AUGUST 2016
Drawn By:	AGB
Designed By:	AGB
Checked By:	
Approved By:	
Stamp:	

STATE OF NEW HAMPSHIRE JOHN C. BERRY No. 10779 LICENSED PROFESSIONAL ENGINEER

Rev.	Description	By	Date
3	CLIENT ISSUE	ECT	10/27/16
2	CLIENT REVIEW	ECT	9/22/16
1	CONCEPT DESIGN	ECT	08/23/16

GZA
DARTMOUTH COLLEGE
SYNTHETIC MEDIA
GROUNDWATER
TREATMENT SYSTEM

RENNIE FARMS, NH

TIE POINTS ECT CONTAINER ELEVATION VIEWS

M-102

Sheet: 2 of 2

SINNETT, MARILYN Printed: 10/28/2016 1:21 PM Layout: M-102
C:\USERS\MSINNETT\DOCUMENTS\DARTMOUTH\LAYOUT\128872-002_M-101-D3_LAYOUT.DWG

DARTMOUTH/GZA
RENNIE FARMS
SYNTHETIC MEDIA
GROUNDWATER TREATMENT
SYSTEM

HANOVER, NH

SHEET NO.	DRAWING NO.	SHEET TITLE
1	G-100	TITLE SHEET
2	P-100	P&ID LEGEND SHEET
3	P-102	PROCESS FLOW DIAGRAM
4	P-103	P&ID SYSTEM INFLUENT
5	P-104	P&ID CARBON PRETREATMENT
6	P-105	P&ID AMBERSORB VESSELS
7	P-106	P&ID TREATED WATER
8	P-107	P&ID WATER SOFTENING
9	P-108	P&ID STEAM GENERATION
10	P-109	P&ID SUPERHEAT
11	P-110	P&ID COOLING EQUIPMENT
12	P-111	P&ID CONDENSATE HANDLING

ect2
75 Washington Avenue
Suite 1A
Portland, ME 04101
www.ect2.com

Project No.:	42979-000
Scale:	N/A
Date:	01/25/2016
Drawn By:	CJL
Designed By:	MMS
Checked By:	AGB
Approved By:	ECT

Stamp:

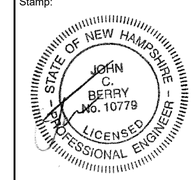

Rev.	Description	By	Date
3	CLIENT ISSUE	ECT	10/27/16
2	ADDENDUM 1	ECT	10/22/16
1	ISSUE FOR FABRICATION	ECT	10/10/16

DARTMOUTH/GZA
RENNIE FARMS
GROUNDWATER
TREATMENT
SYSTEM

TITLE SHEET

G-100

Sheet: 1 of 12

PUMP LEGEND

- CENTRIFUGAL PUMP
- SUMP WITH PUMP
- VACUUM PUMP
- INLINE VERTICAL PUMP
- DIAPHRAGM PUMP
- METERING PUMP
- CENTRIFUGAL FAN
- COMPRESSOR
- PROGRESSIVE CAVITY PUMP
- SUBMERSIBLE PUMP

VALVE LEGEND

- BALL VALVE
- GLOBE VALVE
- BUTTERFLY VALVE
- GATE VALVE
- CHECK VALVE
- PLUG VALVE
- STOP COCK
- MOTOR CONTROL VALVE
- SOLENOID VALVE
- AIR OPERATED VALVE
- SAMPLE PORT
- 3-WAY VALVE
- 4-WAY VALVE
- NEEDLE VALVE
- ROOT VALVE
- SELF-ACTING PRESSURE REGULATOR
- PRESSURE AND VACUUM RELIEF OR SAFETY VALVE
- BACK FLOW PREVENTER
- FLOAT VALVE
- PRESSURE BALANCED DIAPHRAGM ACTUATOR
- THERMOSTATIC VALVE
- ACTUATED VALVE
- AUTOMATIC FLOW CONTROL VALVE

TYPICAL VALVE ANNOTATIONS

FO - FAIL OPEN
FC - FAIL CLOSED
FL - FAIL LOCKED (POSITION DOES NOT CHANGE
FI - FAIL INDETERMINATE
FAI - FAIL AS IS
NO - NORMALLY OPEN
NC - NORMALLY CLOSED
LO - LOCKED OPEN
LC - LOCKED CLOSED

EQUIPMENT LEGEND

- BAG FILTER
- STATIC MIXER
- SENSOR WELL
- STRAINER
- STEAM BOILER
- HEAT EXCHANGER
- HEATER
- COLLECTION BIN
- AIR TO AIR HEAT EXCHANGER
- MIXER

EQUIPMENT LEGEND

- DRUM / TOTE
- TANK
- KNOCK-OUT TANK/ CONDENSATE TRAP
- CONICAL BOTTOM TANK
- CLOSED TOP TANK
- DOUBLE WALL TANK
- GRANULAR ACTIVATED CARBON
- VENT TO ATMOSPHERE
- BASKET STRAINER
- CARTRIDGE FILTER
- TURBINE METER
- VORTEX METER
- ORIFICE PLATE
- SILENCER
- DUAL SERVICE HEAT EXCHANGER
- FILTER
- SITE GLASS
- RESIN TRAP
- STEAM TRAP
- MUFFLER
- INLINE FAN
- COMPRESSED AIR COMBINATION FILTER / REGULATOR W/ GAUGE
- SAFETY SHOWER

EQUIPMENT LEGEND

- CAP
- THREADED CAP
- FLEXIBLE CONNECTOR
- PIPE ANCHOR
- PIPE GUIDE
- PIPE EXPANSION LOOP
- EXPANSION JOINT
- FLOW ARROW
- REDUCER/BUSHING
- AMBIENT AIR
- QUICK CONNECT
- UNION
- TEE
- PITLESS ADAPTER
- DUCTED AIR FLOW FROM SPACE
- FLANGE
- OPEN DRAIN (SCHEMATIC)
- DRAIN (PLAN VIEW)
- CLEANOUT (PLAN VIEW)
- SANITARY VENT
- SPACE PENETRATIONS
- CYCLE COUNTER

UTILITY 10 — ENTRY TO THE SYSTEM

SERVICE
SERVICE LINE NUMBER
CONTINUATION FROM DWG. X-XXX
GW 22 P-108
TO T-1000
DESTINATION OR REFERENCE POINT

TP-0 — OWNER TIE-POINT

WALL THICKNESS ABBREVIATIONS

40	SCHEDULE 40
80	SCHEDULE 80
K	TYPE "K"
L	TYPE "L"

INSULATION ABBREVIATIONS

N - NONE
I - INSULATED
HT&I - HEAT TRACED & INSULATED
VAS - VAPOR INSULATION (ARMORFLEX)

REFER TO SPEC 40-05-00 FOR INSULATION TYPES/THICKNESS

INSTRUMENT DESIGNATION

- PADDLE TYPE FLOW SWITCH
- PI 101 — FIELD-MOUNTED INSTRUMENT
- PI 101 — REMOTE READ INSTRUMENT, PRIMARY LOCATION (E.G., MAIN CONTROL PANEL)
- HUMAN USER INTERFACE (HUI) INCLUDES DISPLAY, STATUS, ALARM, AND/OR SETPOINTS, PROGRAMMABLE LOGIC CONTROLLER INPUT/OUTPUT
- XS 101 — REMOTE READ INSTRUMENT, AUXILIARY LOCATION
- ELECTRICAL SIGNAL
- S — MOTOR STARTER
- M — MOTOR
- VFD — VARIABLE FREQUENCY DRIVE
- AL — ALARM LIGHT
- AUDIBLE ALARM
- HOA — HAND-OFF-AUTO SWITCH
- 5.0 — MOTOR HP
- 500A 3Ø — BREAKER
- ELECTRICAL OVERLOAD

PIPING IDENTIFICATION

LINE SIZE
PIPING SPEC
SERVICE
INSULATION

4"-GALV-GW-N
(SEE PIPE SPEC 40-05-00)

SERVICE ABBREVIATIONS

AP - INSTRUMENT AIR
A- AIR
AP - COMPRESSED AIR
BBD - BOILER BLOW DOWN
BMW - BOILER MAKEUP WATER
BW - BACKWASH
CHEM - CHEMICAL
CHWS - CHILLED WATER SUPPLY
CHWR - CHILLED WATER RETURN
COND- CONDESATE
CWR - COOLING WATER RETURN
CWS - COOLING WATER SUPPLY
CW - CITY WATER
EP- ELECTRICAL PENETRATION
GW - GROUNDWATER
NG - NATURAL GAS
PV - PROCESS VAPOR
PW - PROCESS WATER
SW - SOFTENED WATER
STM - STEAM
TV - TREATED VAPOR
TW - TREATED WATER
V - VENT
VP - VENT PROCESS
VT - VENT TREATED
WW - WASTE WATER

LETTER (ALL POSITIONS)	FIRST POSITION (MEASURED VARIABLE)	SUCCEEDING LETTERS (MODIFIERS)
A	ANALYSIS	ALARM OR ACTIVATE
B	BURNER FLAME	
C	CONDUCTIVITY	CONTROL OR CLOSE
D	DIFFERENTIAL OR DENSITY	DRIVE
E	VOLTAGE OR ELECTRICAL	ELEMENT
F	FLOW	FRACTION
G	GAGING	GLASS
H	HAND	HIGH
I	CURRENT	INDICATOR
J	POWER	SCAN
K	TIME	
L	LEVEL	LOW OR LIGHT
M	MOISTURE OR HUMIDITY	
O	ORIFICE OR OPERATION	OPEN
P	PRESSURE OR VACUUM	POINT
Q	QUANTITY OR INTEGRATE	TOTALIZER
R	RADIOACTIVITY	RECORDER
S	LIMIT OR SPEED	SWITCH OR STATUS
T	TEMPERATURE	TRANSMITTER
U	MULTIFUNCTION	
V	VARIABLE OR VISCOSITY	VALVE OR LOUVER
W	WATER OR WEIGHT	WELL
X	RUN	RELAY
Y	EVENT OR PROCESS	COMPUTE
Z	POSITION	FINAL CONTROL

PIPING MATERIALS

CU	COPPER
CS	CARBON STEEL
SS	STAINLESS STEEL 316L
HDPE	HIGH DENSITY POLYETHYLENE
PVC	POLY VINYL CHLORIDE
PETT	POLYETHYLENE TEREPHTHALATE TUBING
PEX	CROSSLINKED POLYETHYLENE
CPVC	HIGH TEMP PVC

See Pipe Spec 40-05-00

OTHER

- COMPRESSED AIR
- VAPOR
- VENDOR/EQUIP. AREA LIMITS

KEY FOR DETAIL CALL-OUT

DETAIL NUMBER
1
C-1
REFERENCE SHEET
(WHEN CALLING A DETAIL, THE SHEET NUMBER WHERE THE DETAIL IS LOCATED; WHEN IDENTIFYING THE DETAIL, THE SHEET FROM WHICH THE DETAIL WAS CALLED)

PROJECT ACRONYMS

CDA	CLEAN DRY AIR
CMP	CORRUGATED METAL PIPE
FPT	FEMALE PIPE THREAD
GAC	GRANULAR ACTIVATED CARBON
HSS	HOLLOW STRUCTURAL SECTION TUBING
MPT	MALE PIPE THREAD
PLC	PROGRAMMABLE LOGIC CONTROLLER
SP	SAMPLE PORT

ect2
75 Washington Avenue
Suite 1A
Portland, ME 04101-2617
www.ect2.com

Project No.:	128872-002
Scale:	N/A
Date:	25-SEPTEMBER-2015
Drawn By:	AJC, CJL
Designed By:	MMS
Checked By:	AGB
Approved By:	ECT

Stamp: STATE OF NEW HAMPSHIRE — JOHN C. BERRY No. 10779 — LICENSED PROFESSIONAL ENGINEER

Rev.	Description	By	Date
3	CLIENT ISSUE	ECT	10/27/16
2	ADDENDUM 1	ECT	10/22/16
1	ISSUE FOR FABRICATION	ECT	10/10/16

DARTMOUTH/GZA
RENNIE FARMS
GROUNDWATER
TREATMENT
SYSTEM

P&ID
LEGEND

P-100

Sheet: 2 of 12

SINNETT, MARILYN Printed: 10/27/2016 4:59 PM Layout: P-100
C:\USERS\MSINNETT\DOCUMENTS\DARTMOUTHP&IDS\128872-002_P-100_LEGEND.DWG

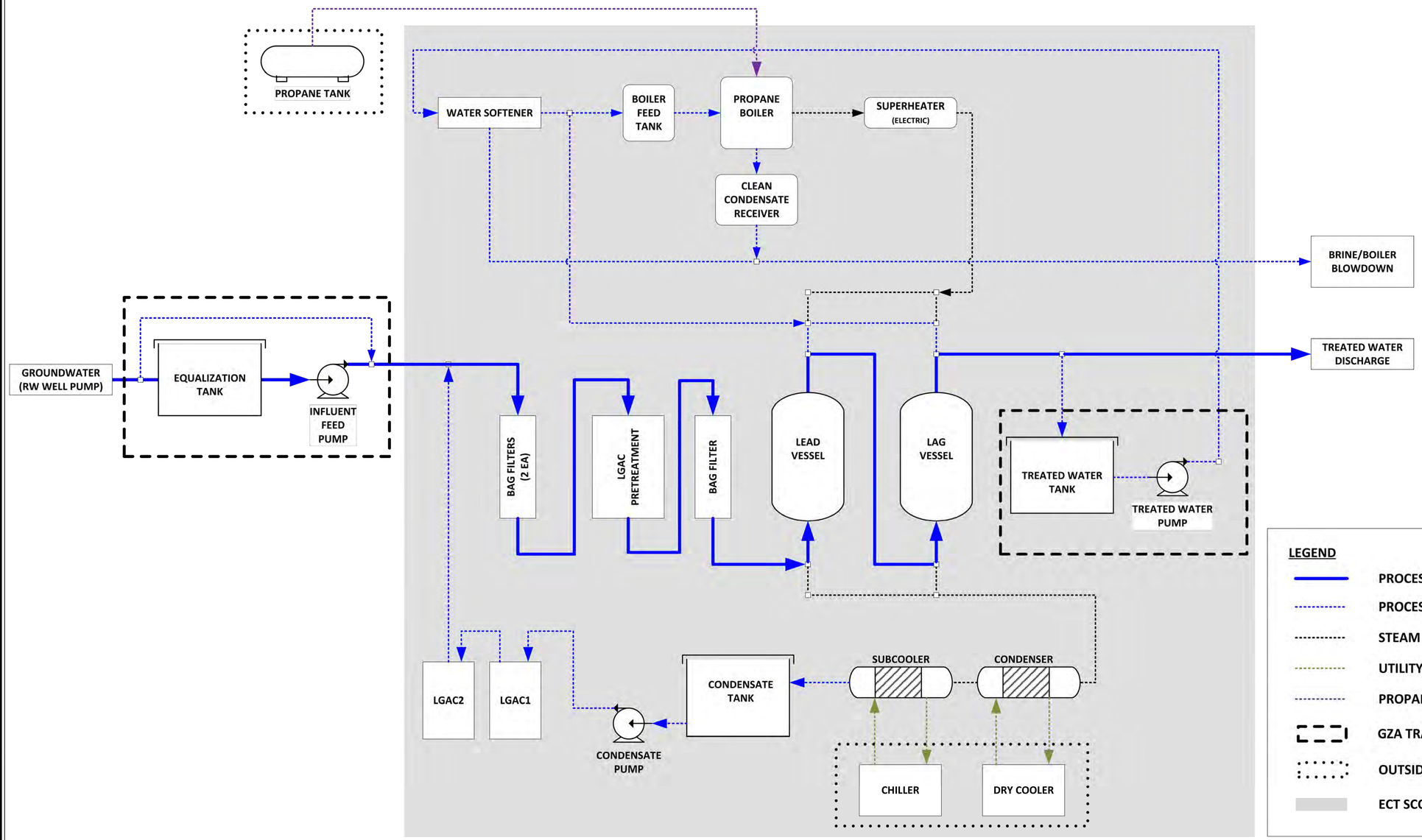

LEGEND

- PROCESS WATER PRIMARY PATHWAY
- PROCESS WATER SECONDARY PATHWAY
- STEAM
- UTILITY COOLING LOOP
- PROPANE
- GZA TRAILER
- OUTSIDE
- ECT SCOPE OF SUPPLY

ect2
75 Washington Avenue
Suite 1A
Portland, ME 04101-2617
www.ect2.com

Project No.:	128872-002
Scale:	N/A
Date:	10/10/16
Drawn By:	AJC, CJL
Designed By:	MMS
Checked By:	AGB
Approved By:	ECT

Stamp:

STATE OF NEW HAMPSHIRE - JOHN C. BERRY No. 10779 - LICENSED PROFESSIONAL ENGINEER

Rev.	Description	By	Date
3	CLIENT ISSUE	ECT	10/27/16
2	ADDENDUM 1	ECT	10/22/16
1	ISSUE FOR FABRICATION	ECT	10/10/16

DARTMOUTH/GZA
RENNIE FARMS
GROUNDWATER
TREATMENT
SYSTEM

PROCESS
FLOW
DIAGRAM

P-102

Sheet: 3 of 12

SINNETT, MARILYN Printed: 10/27/2016 4:58 PM Layout: P-102
C:\USERS\MSINNETT\DOCUMENTS\DARTMOUTH\P&IDS\128872-002_P-102_PFD.DWG

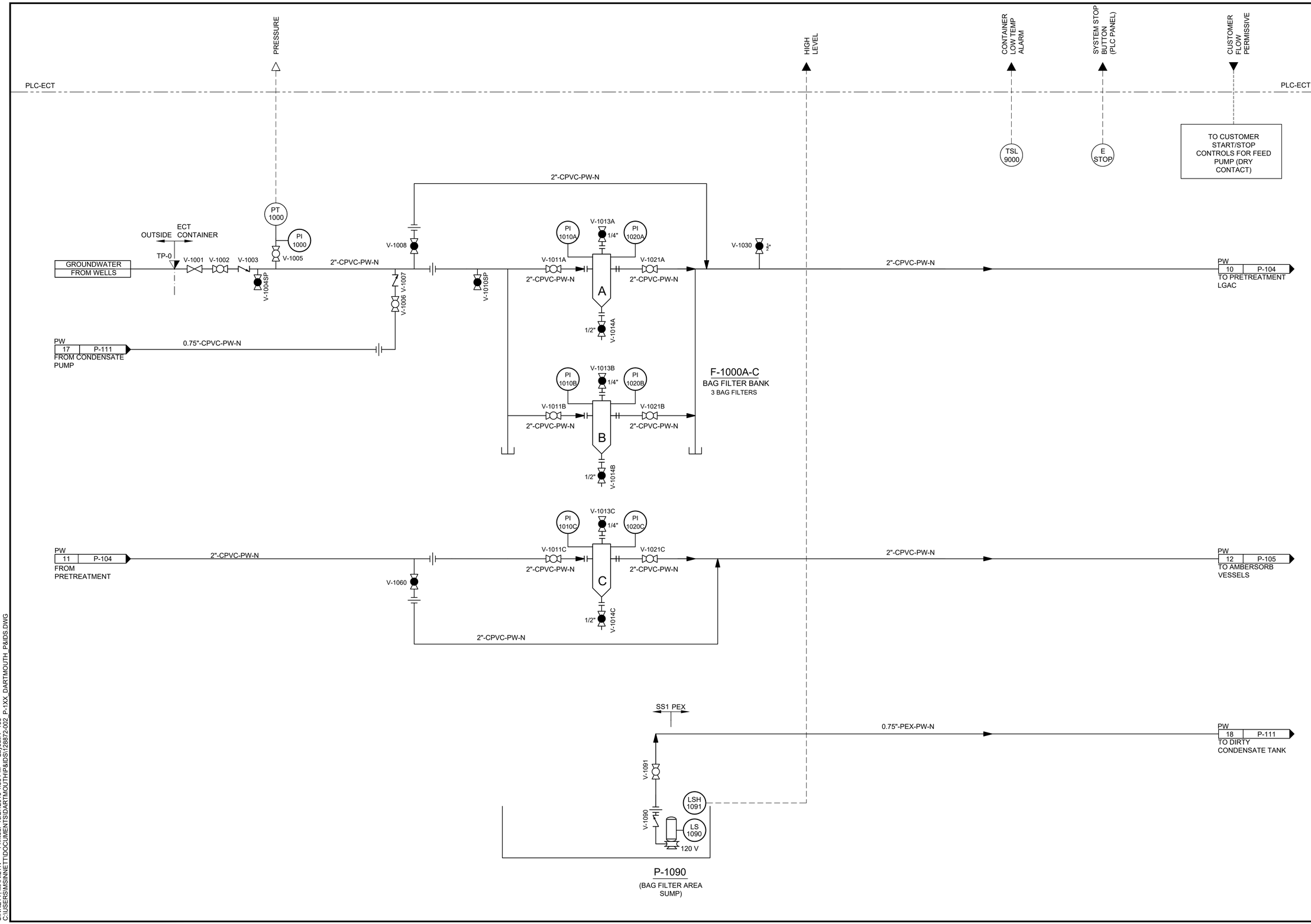

ect2
75 Washington Avenue
Suite 1A
Portland, ME 04101
www.ect2.com

Project No.:	128872-002
Scale:	N/A
Date:	09 SEPT 2016
Drawn By:	MMS
Designed By:	MMS
Checked By:	AGB
Approved By:	AGB

Stamp:

STATE OF NEW HAMPSHIRE - JOHN C. BERRY No. 10779 LICENSED PROFESSIONAL ENGINEER

Rev.	Description	By	Date
3	CLIENT ISSUE	ECT	10/27/16
2	ADDENDUM 1	ECT	10/22/16
1	ISSUE FOR FABRICATION	ECT	10/10/16
A	50% DESIGN	ECT	9/30/16

DARTMOUTH/GZA
RENNIE FARMS
GROUNDWATER
TREATMENT
SYSTEM

P&ID
SYSTEM
INFLUENT

P-103

Sheet: 4 of 12

SINNETT, MARILYN Printed: 10/27/2016 4:56 PM Layout: P-103
C:\USERS\MSINNETT\DOCUMENTS\DARTMOUTH\P&IDS\128872-002_P-1XX_DARTMOUTH_P&IDS.DWG

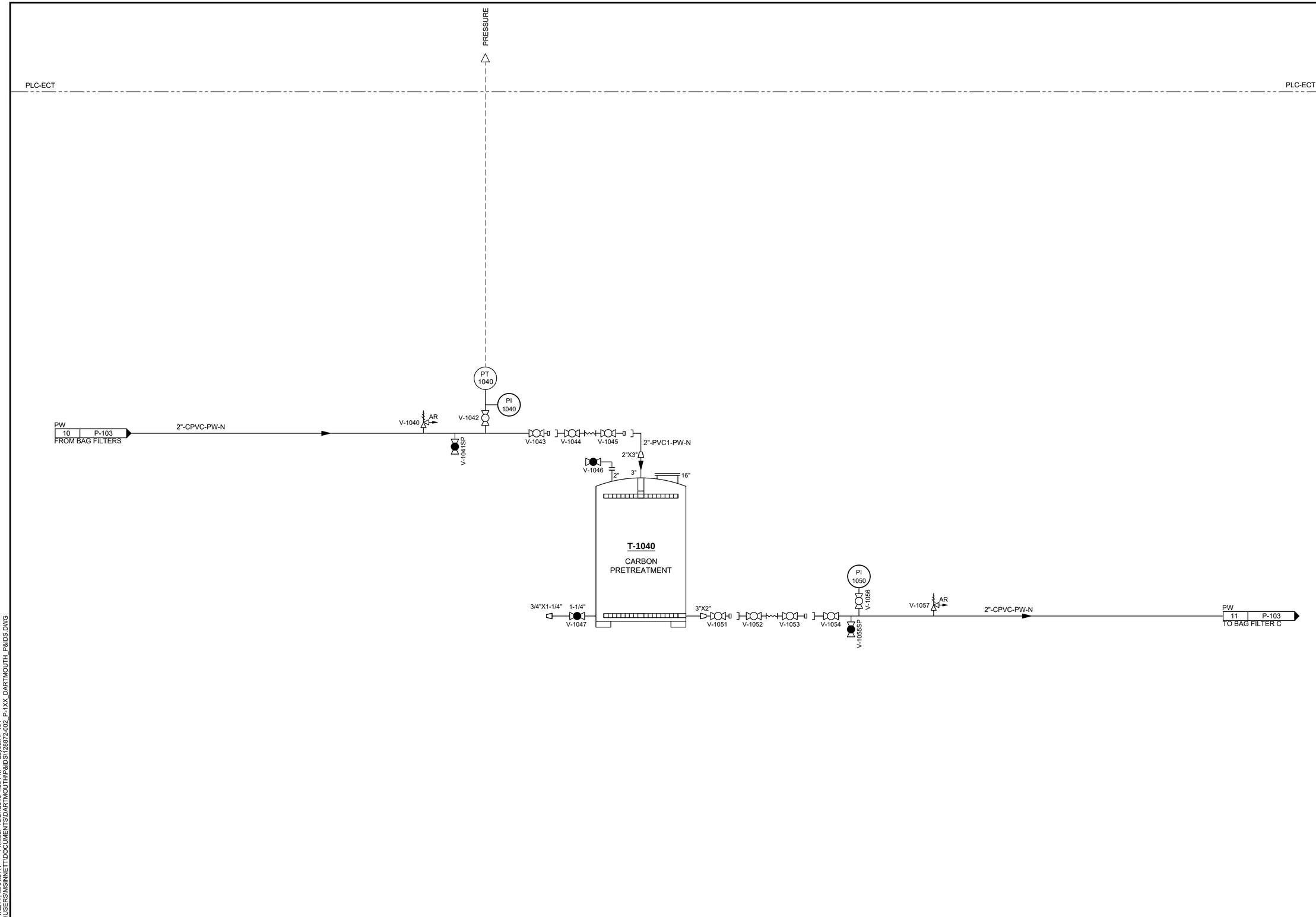

ect2
75 Washington Avenue
Suite 1A
Portland, ME 04101
www.ect2.com

Project No.:	128872-002
Scale:	N/A
Date:	09 SEPT 2016
Drawn By:	MMS
Designed By:	MMS
Checked By:	AGB
Approved By:	AGB

Stamp:

STATE OF NEW HAMPSHIRE
JOHN C. BERRY
No. 10779
LICENSED
PROFESSIONAL ENGINEER

Rev.	Description	By	Date
3	CLIENT ISSUE	ECT	10/27/16
2	ADDENDUM 1	ECT	10/22/16
1	ISSUE FOR FABRICATION	ECT	10/10/16
A	50% DESIGN	ECT	9/30/16

DARTMOUTH/GZA
RENNIE FARMS
GROUNDWATER
TREATMENT
SYSTEM

P&ID
CARBON
PRETREATMENT

P-104

Sheet: 5 of 12

SINNETT, MARILYN Printed: 10/27/2016 4:56 PM Layout: P-104
C:\USERS\MSINNETT\DOCUMENTS\DARTMOUTH\P&IDS\128872-002_P-1XX_DARTMOUTH_P&IDS.DWG

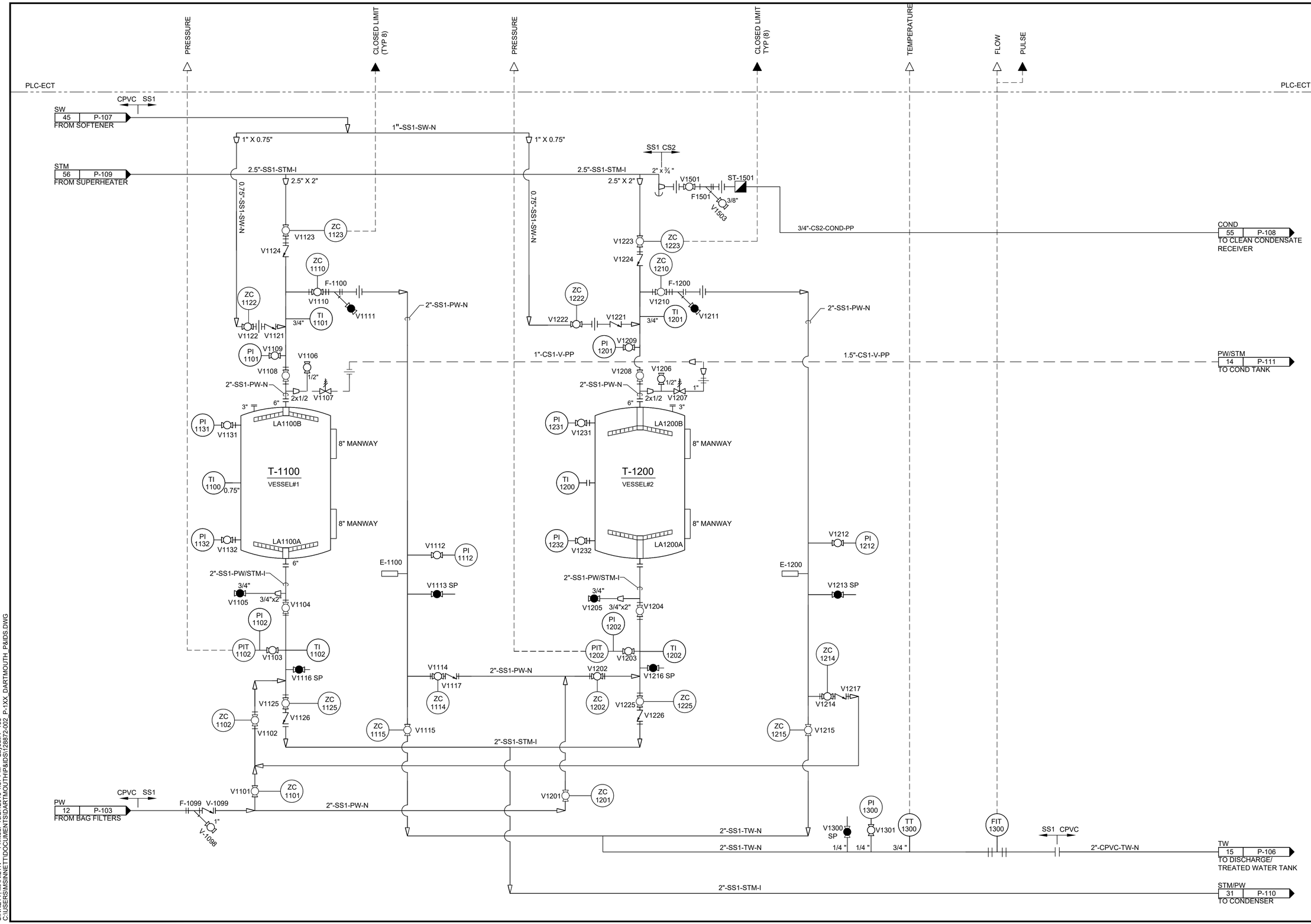

ect2
75 Washington Avenue
Suite 1A
Portland, ME 04101
www.ect2.com

Project No.:	128872-002
Scale:	N/A
Date:	09 SEPT 2016
Drawn By:	MMS
Designed By:	MMS
Checked By:	AGB
Approved By:	AGB

Stamp:

STATE OF NEW HAMPSHIRE
JOHN C. BERRY
No. 10779
LICENSED
PROFESSIONAL ENGINEER

Rev.	Description	By	Date
3	CLIENT ISSUE	ECT	10/27/16
2	ADDENDUM 1	ECT	10/22/16
1	ISSUE FOR FABRICATION	ECT	10/10/16
A	50% DESIGN	ECT	9/30/16

DARTMOUTH/GZA
RENNIE FARMS
GROUNDWATER
TREATMENT
SYSTEM

P&ID
AMBERSORB
VESSELS

P-105

Sheet: 6 of 12

SINNETT, MARILYN Printed: 10/27/2016 4:57 PM Layout: P-105
C:\USERS\MSINNETT\DOCUMENTS\DARTMOUTH\P&IDS\128872-002_P-1XX_DARTMOUTH_P&IDS.DWG

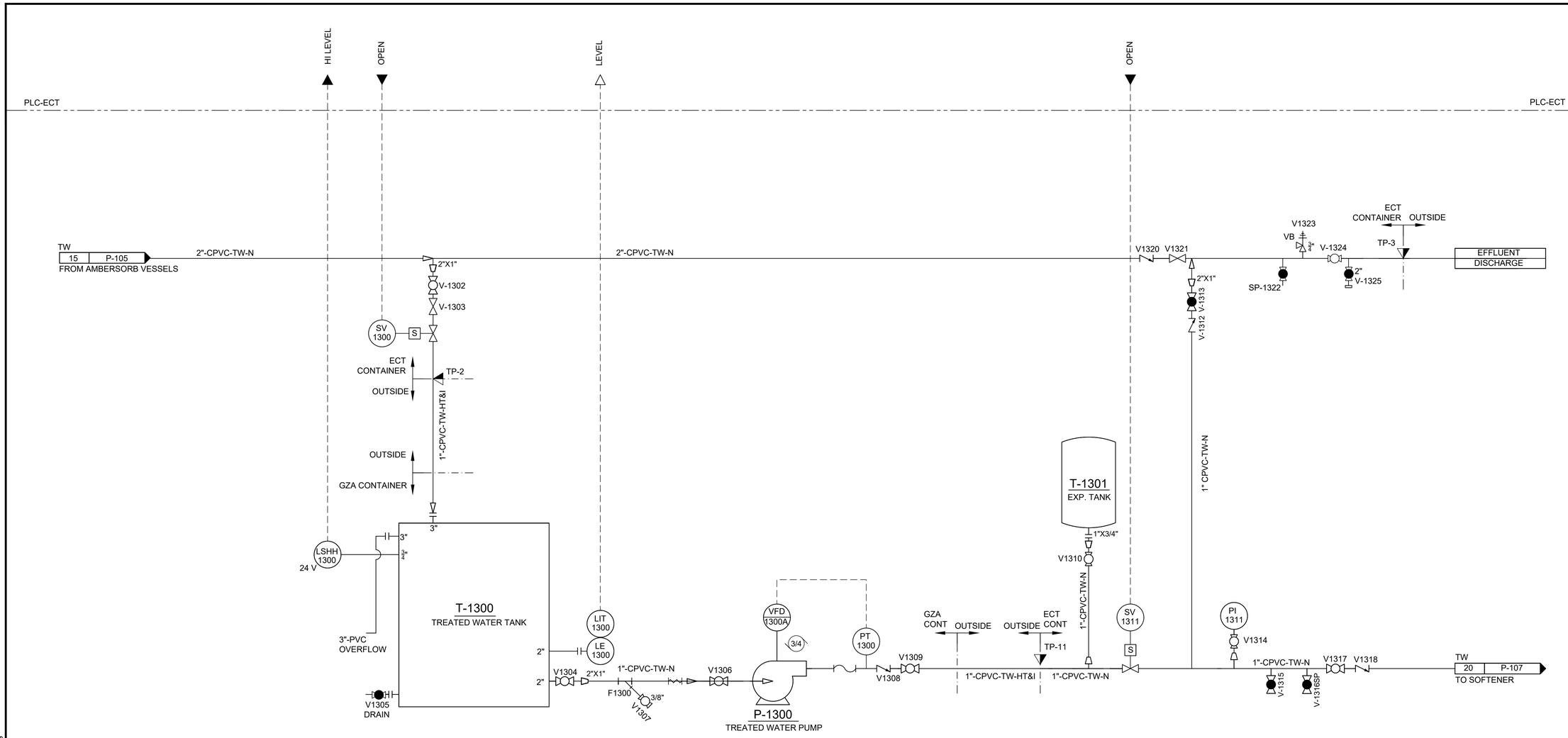

ect2
75 Washington Avenue
Suite 1A
Portland, ME 04101
www.ect2.com

Project No.:	128872-002
Scale:	N/A
Date:	09 SEPT 2016
Drawn By:	MMS
Designed By:	MMS
Checked By:	AGB
Approved By:	AGB

Stamp:

STATE OF NEW HAMPSHIRE
JOHN C. BERRY
No. 10779
LICENSED
PROFESSIONAL ENGINEER

Rev.	Description	By	Date
3	CLIENT ISSUE	ECT	10/27/16
2	ADDENDUM 1	ECT	10/22/16
1	ISSUE FOR FABRICATION	ECT	10/10/16
A	50% DESIGN	ECT	9/30/16

DARTMOUTH/GZA
RENNIE FARMS
GROUNDWATER
TREATMENT
SYSTEM

P&ID
TREATED WATER

P-106

Sheet: 7 of 12

SINNETT, MARILYN Printed: 10/27/2016 4:57 PM Layout: P-106
C:\USERS\MSINNETT\DOCUMENTS\DARTMOUTH\P&IDS\128872-002_P-1XX_DARTMOUTH_P&IDS.DWG

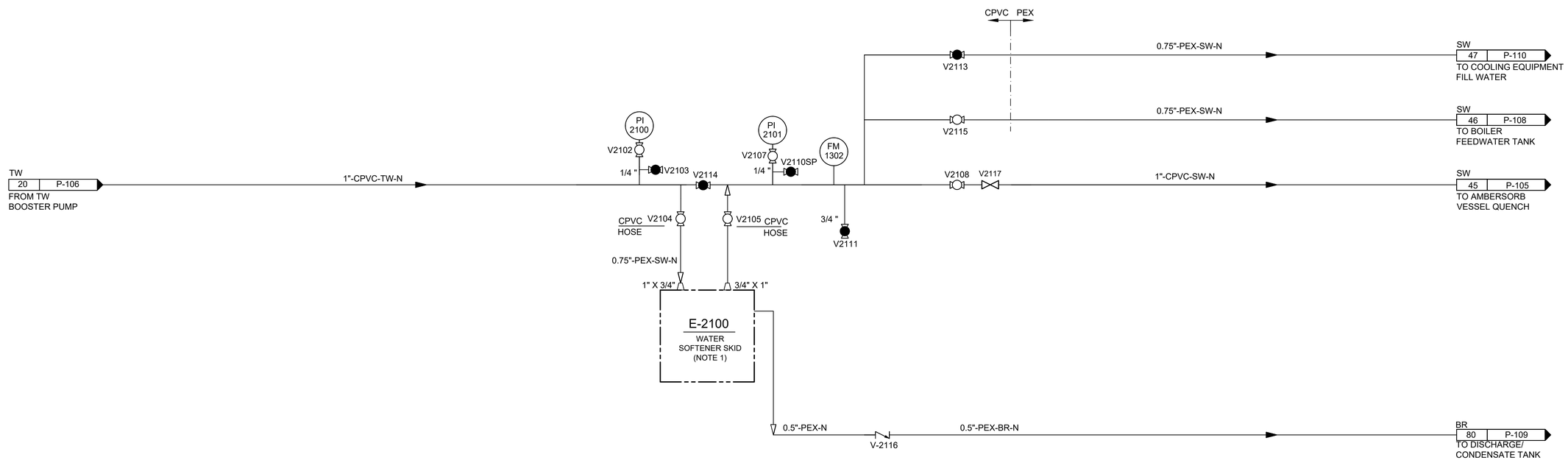

NOTES:

1. REFER TO VENDOR DRAWINGS FOR EQUIPMENT DETAIL.

ect2
75 Washington Avenue
Suite 1A
Portland, ME 04101
www.ect2.com

Project No.:	128872-002
Scale:	N/A
Date:	09 SEPT 2016
Drawn By:	MMS
Designed By:	MMS
Checked By:	AGB
Approved By:	AGB

Stamp:

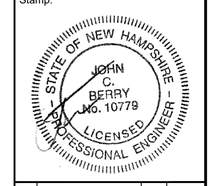

Rev.	Description	By	Date
3	CLIENT ISSUE	ECT	10/27/16
2	ADDENDUM 1	ECT	10/22/16
1	ISSUE FOR FABRICATION	ECT	10/10/16
A	50% DESIGN	ECT	9/30/16

DARTMOUTH/GZA
RENNIE FARMS
GROUNDWATER
TREATMENT
SYSTEM

P&ID
WATER
SOFTENING

P-107

SINNETT, MARILYN Printed: 10/27/2016 4:57 PM Layout: P-107
C:\USERS\MSINNETT\DOCUMENTS\DARTMOUTH\P&IDS\128872-002_P-1XX_DARTMOUTH_P&IDS.DWG

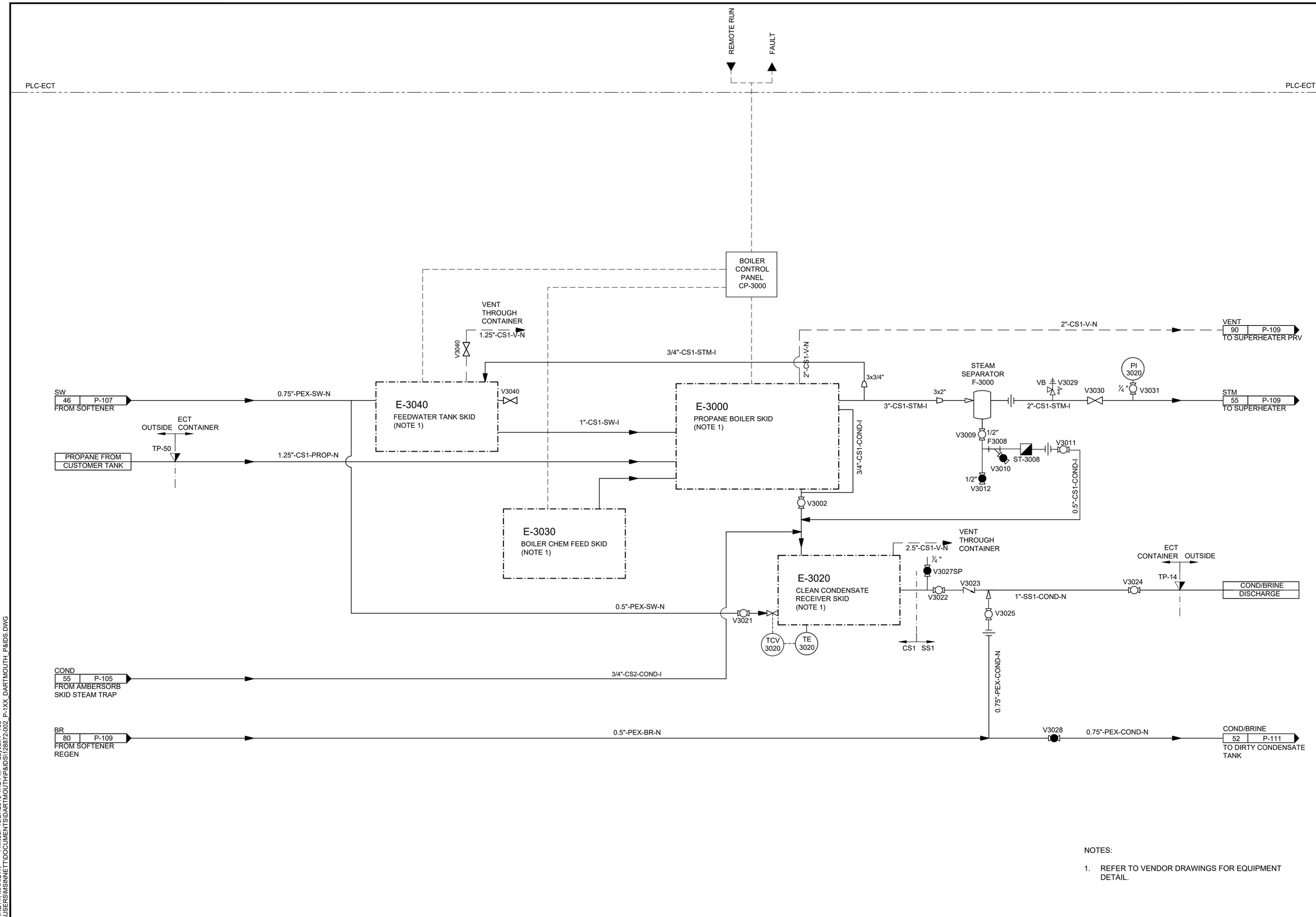

NOTES:

1. REFER TO VENDOR DRAWINGS FOR EQUIPMENT DETAIL.

ect2
75 Washington Avenue
Suite 1A
Portland, ME 04101
www.ect2.com

Project No.:	128872-002
Scale:	N/A
Date:	09 SEPT 2016
Drawn By:	MMS
Designed By:	MMS
Checked By:	AGB
Approved By:	AGB

Stamp:

STATE OF NEW HAMPSHIRE – JOHN C. BERRY No. 10779 – LICENSED PROFESSIONAL ENGINEER

Rev.	Description	By	Date
3	CLIENT ISSUE	ECT	10/27/16
2	ADDENDUM 1	ECT	10/22/16
1	ISSUE FOR FABRICATION	ECT	10/10/16
A	50% DESIGN	ECT	9/30/16

DARTMOUTH/GZA
RENNIE FARMS
GROUNDWATER
TREATMENT
SYSTEM

P&ID
STEAM
GENERATION

P-108

Sheet: 9 of 12

SINNETT, MARILYN Printed: 10/27/2016 4:42 PM Layout: P-108
C:\USERS\MSINNETT\DOCUMENTS\DARTMOUTH\P&IDS\128872-002_P-1XX_DARTMOUTH_P&IDS.DWG

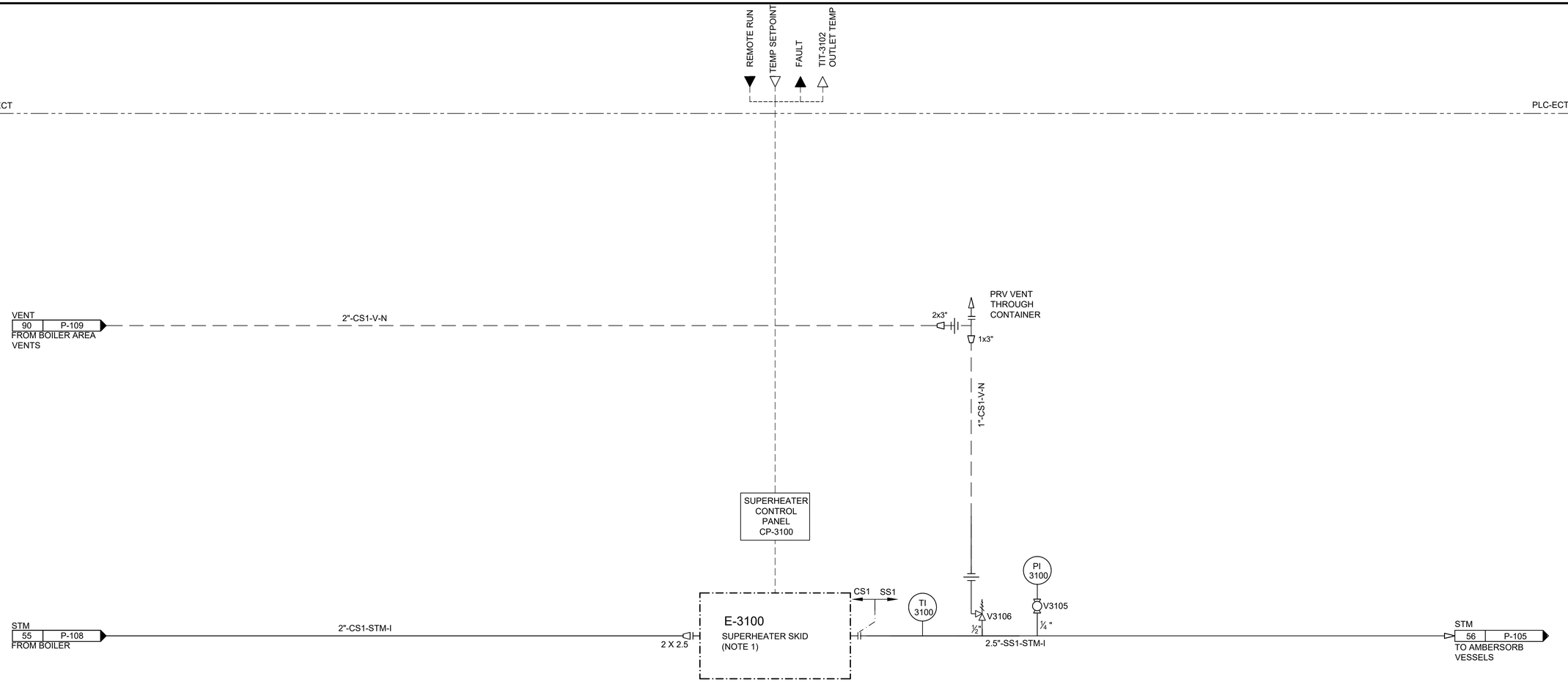

NOTES:

1. REFER TO VENDOR DRAWINGS FOR EQUIPMENT DETAIL.

ect2
75 Washington Avenue
Suite 1A
Portland, ME 04101
www.ect2.com

Project No.:	128872-002
Scale:	N/A
Date:	09 SEPT 2016
Drawn By:	MMS
Designed By:	MMS
Checked By:	AGB
Approved By:	AGB

Stamp:

STATE OF NEW HAMPSHIRE
JOHN C. BERRY
No. 10779
LICENSED
PROFESSIONAL ENGINEER

Rev.	Description	By	Date
3	CLIENT ISSUE		10/27/16
2	ADDENDUM 1	ECT	10/22/16
1	ISSUE FOR FABRICATION	ECT	10/10/16
A	50% DESIGN	ECT	9/30/16

DARTMOUTH/GZA
RENNIE FARMS
GROUNDWATER
TREATMENT
SYSTEM

P&ID
SUPERHEAT

P-109

Sheet: 10 of 12

SINNETT, MARILYN Printed: 10/27/2016 4:55 PM Layout: P-109
C:\USERS\MSINNETT\DOCUMENTS\DARTMOUTH\P&IDS\128872-002_P-1XX_DARTMOUTH_P&IDS.DWG

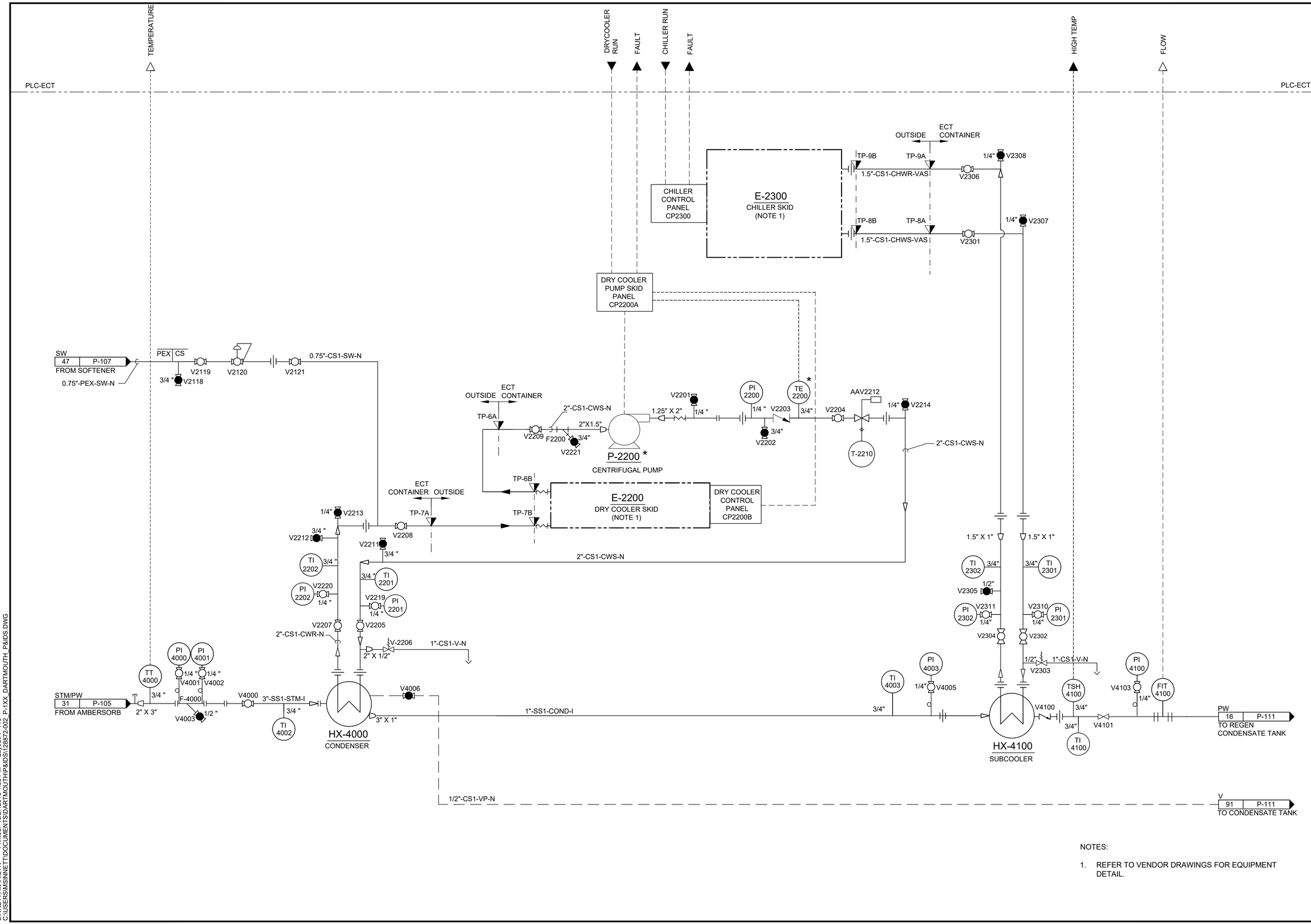

NOTES:

1. REFER TO VENDOR DRAWINGS FOR EQUIPMENT DETAIL.

ect2
75 Washington Avenue
Suite 1A
Portland, ME 04101
www.ect2.com

Project No.:	128872-002
Scale:	N/A
Date:	09 SEPT 2016
Drawn By:	MMS
Designed By:	MMS
Checked By:	AGB
Approved By:	AGB

Stamp:

STATE OF NEW HAMPSHIRE JOHN C. BERRY NO. 10779 LICENSED PROFESSIONAL ENGINEER

Rev.	Description	By	Date
3	CLIENT ISSUE	ECT	10/27/16
2	ADDENDUM 1	ECT	10/22/16
1	ISSUE FOR FABRICATION	ECT	10/10/16
A	50% DESIGN	ECT	9/30/16

DARTMOUTH/GZA
RENNIE FARMS
GROUNDWATER
TREATMENT
SYSTEM

P&ID
COOLING
EQUIPMENT

P-110

Sheet: 11 of 12

SINNETT, MARILYN Printed: 10/27/2016 4:55 PM Layout: P-110
C:\USERS\MSINNETT\DOCUMENTS\DARTMOUTH\P&IDS\128872-002_P-1XX_DARTMOUTH_P&IDS.DWG

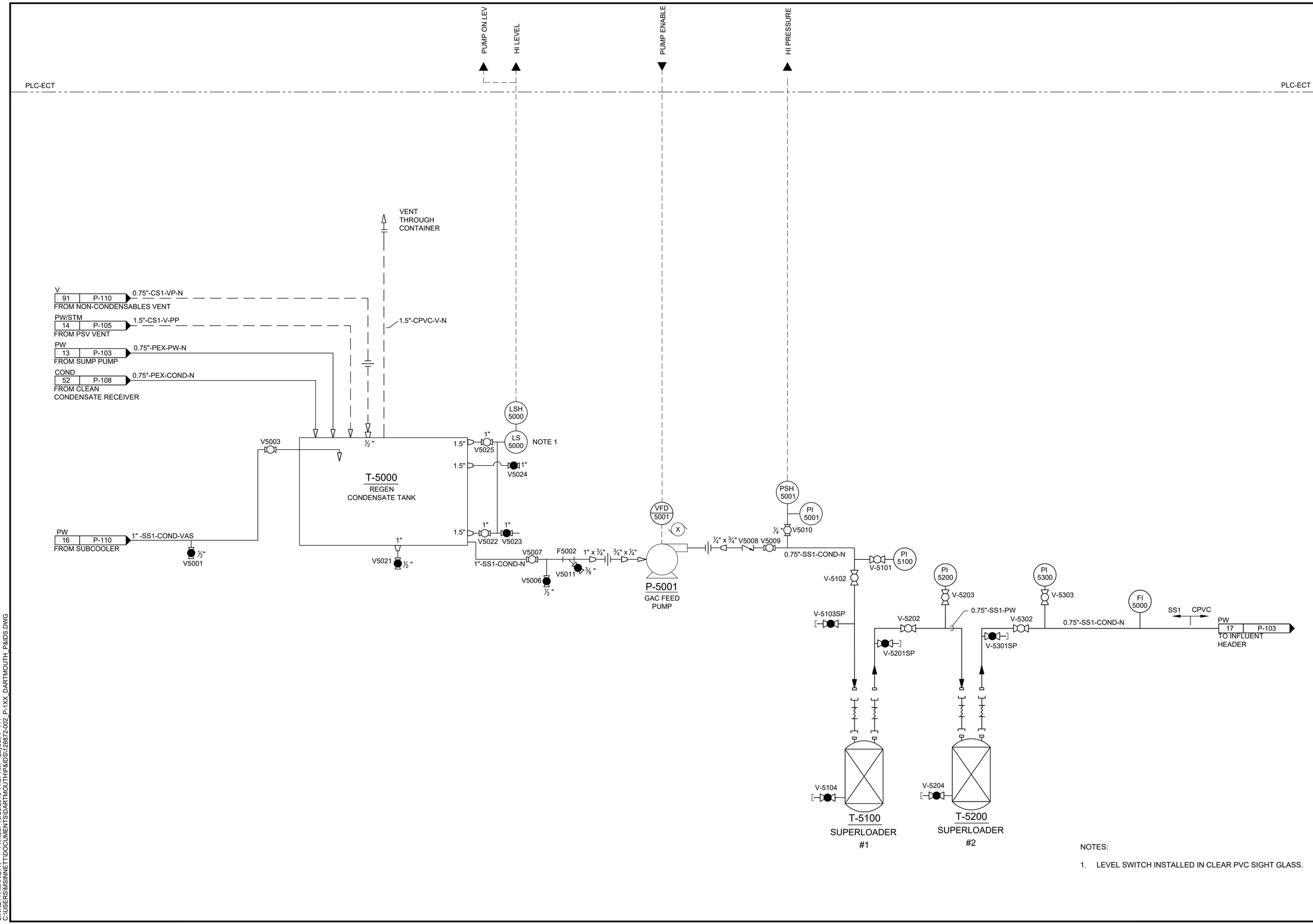

NOTES:

1. LEVEL SWITCH INSTALLED IN CLEAR PVC SIGHT GLASS.

ect2
75 Washington Avenue
Suite 1A
Portland, ME 04101
www.ect2.com

Project No.:	128872-002
Scale:	N/A
Date:	09 SEPT 2016
Drawn By:	MMS
Designed By:	MMS
Checked By:	AGB
Approved By:	AGB

Stamp: STATE OF NEW HAMPSHIRE JOHN C. BERRY No. 10779 LICENSED PROFESSIONAL ENGINEER

Rev.	Description	By	Date
3	CLIENT ISSUE	ECT	10/27/16
2	ADDENDUM 1	ECT	10/22/16
1	ISSUE FOR FABRICATION	ECT	10/10/16
A	50% DESIGN	ECT	9/30/16

DARTMOUTH/GZA
RENNIE FARMS
GROUNDWATER
TREATMENT
SYSTEM

P&ID
CONDENSATE
HANDLING

P-111

Sheet: 12 of 12

SINNETT, MARILYN Printed: 10/28/2016 11:57 AM Layout: P-111
C:\USERS\MSINNETT\DOCUMENTS\DARTMOUTH\P&IDS\128872-002_P-1XX_DARTMOUTH_P&IDS.DWG