Chapter 4

RIVERS AND STREAMS

4.1 The Hydrological Cycle

Rivers and streams are but a link in the global cycle of water, called the *hydrological cycle*. Approximately half of the solar energy striking the earth's surface is estimated to be consumed by the latent heat necessary to convert liquid water into water vapor, either through evaporation (mostly over the oceans) or through transpiration (mostly of plant leaves). The combination of these two processes, together called *evapotranspiration*, consumes an enormous amount of energy, about 4000 times the present rate of human energy consumption, and corresponds to the annual removal of a one-meter thick layer of water around the entire globe.

The moisture so introduced in the lower atmosphere travels with the prevailing winds and is subjected to the vagaries of their thermodynamics. Sooner or later, an air mass undergoes a temperature drop (due to net cooling or to an adiabatic pressure decrease) that lowers the saturation level sufficiently to force an excess of moisture to condense. *Precipitation* (rain, snow, sleet, etc.) forms and returns the water to the earth's surface. Some of what falls on the continents percolates through the ground and creates subsurface flow in aquifers, while the rest remains on the surface and gathers in a system of streams and rivers. Both flow systems, collectively called *runoff*, return water to the vegetation, lakes and, of course, the oceans, where it is subjected to evapotranspiration, thereby closing the loop. This water loop, consisting of evapotranspiration, precipitation and runoff, constitute the hydrological cycle (Figure 4-1).

Absent from this admittedly simplified scenario is the transient nature of some of the implicated processes. Besides the obvious seasonal variations, cycles of droughts and floods do occur, temporarily modifying the amounts of water stored in lakes and flowing in rivers. Also worth mentioning is the storage effect of underground aquifers and especially of the polar ice caps.

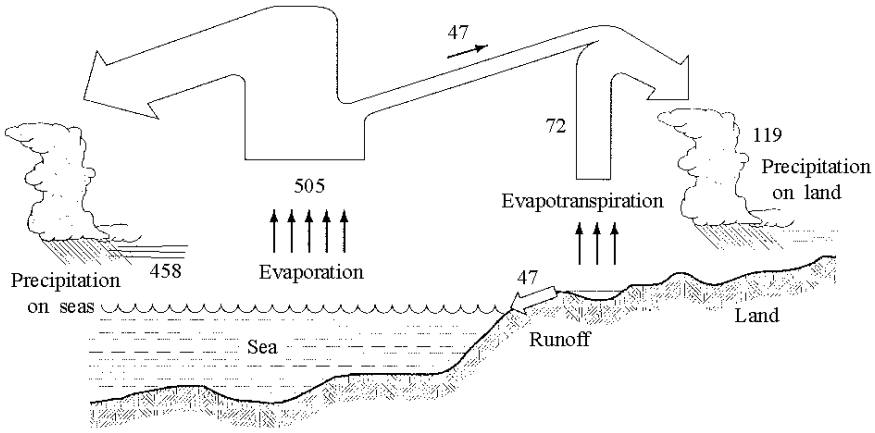

Figure 4-1. The hydrological cycle. Units are 10^3 km^3/year. [From Masters, 1997, based on earlier estimates]

Of all the links in the hydrological cycle, rivers and streams have traditionally been the greatest environmental victims, for the simple reason that their network extends over large continental areas and, consequently, there is almost always a river or stream in the proximity of human activities. Furthermore, with the long-held belief that rivers were self-cleaning (and a hefty dose of 'out of sight – out of mind'!), people felt relatively free to dump their wastes into the nearest body of moving water. This went on for centuries, until the industrial revolution when the population in cities grew rapidly and industrial wastes began to compound the effects of domestic and agricultural wastes. Eventually, problems of water-related diseases (such as cholera), dubious colors, foul odors and fish kills became too obvious to be ignored. Nowadays, the substances that harm rivers and streams are well known; the chief culprits are: pathogens (disease-causing viruses and bacteria), any organic substance the decay of which is accompanied by a depletion of dissolved oxygen (such as untreated sewage), nutrients (such as phosphorus and nitrogen, which cause unwanted algal growth), heavy metals, pesticides and volatile organic compounds (nicknamed VOCs, such as trichloroethylene (TCE)).

4.2 Turbulent Dispersion in Rivers

Hydraulics

River flow is driven by gravity: water goes downhill. So, there is a clear relationship between water velocity and bottom slope. Because rivers have rough bottoms and relatively fast currents, their flow is almost always turbulent, even though the casual observer may not realize that it is so. Ground friction retards

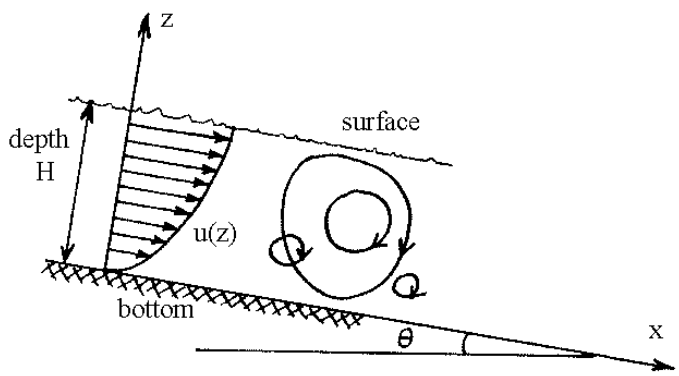

Figure 4-2. Schematic longitudinal section of a river depicting the vertically sheared flow and turbulent vortices.

the flow near the bottom and creates a velocity shear in the vertical, producing 'tumbling' eddies as depicted in Figure 4-2. The eddy rotation is mostly about a horizontal axis transverse to the main direction of the flow, with the largest vortices having therefore a length scale equal to the depth of the water:

$$d_{\max} = H.$$

These eddies cause vertical diffusion, which proceeds at a rate given by a turbulent diffusivity propotional to the product of the typical orbital velocity u_* and the length scale $d_{\max} = H$:

$$D_{\text{vertical}} \simeq u_* H. \tag{4.1}$$

But, what should u_* be?

To answer this question, consider a parcel of fluid extending from bottom to surface and stretching over a length L and width W of the river (Figure 4-3). The bottom stress, τ_b, is the force (per unit area) that impels fluid parcels to reverse their velocities from about u_* near the surface to about $-u_*$ near the bottom. Invoking Newton's law, we write: mass times acceleration equals the force. Since mass is density times volume, volume is area times depth, acceleration is change in speed divided by the time for this change to occur, and the force is stress times area, we have:

$$\text{mass} \times \text{acceleration} = \text{force}$$

$$\rho W L H \times \frac{u_*}{\tau} \simeq \tau_b W L,$$

where ρ is the water density (1000 kg/m^3) and τ the eddy turn-around time, about H/u_*. Simplifications yield $\rho u_*^2 \simeq \tau_b$, i.e.

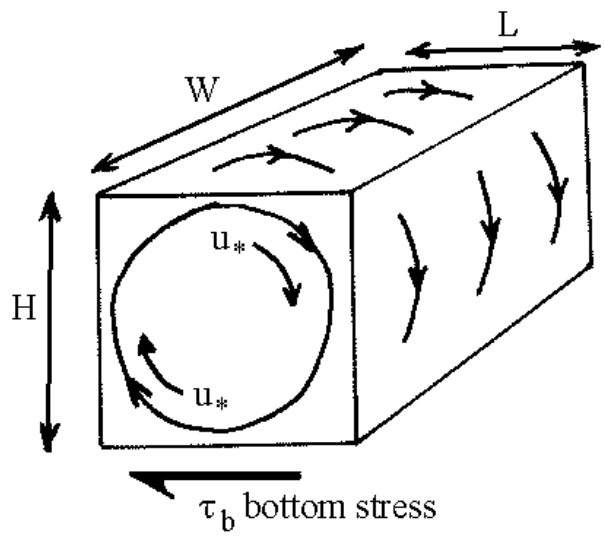

Figure 4-3. Relationship between the orbital velocity u_* in a vertical vortex and the bottom stress.

$$u_* \simeq \sqrt{\frac{\tau_b}{\rho}} \ .$$

Because the turbulent velocity u_* has yet to be precisely defined (within a dimensionless multiplicative constant), we shall use:

$$u_* = \sqrt{\frac{\tau_b}{\rho}} \ . \tag{4.2}$$

In numerous books on turbulence, the velocity u_* defined from the wall stress τ_b by (4.2) is called the *friction velocity.* The next question is: What is the bottom stress τ_b?

For this, consider the same fluid parcel again but paying now attention to the net forces over many eddies (Figure 4-4). The river flows against friction thanks to the forward gravitational force due to the downward slope of the river bed. With the slope defined as $S = \sin\theta$, the downstream component of gravity is $g\sin\theta = gS$. Equating the forward gravitational force (mass times the forward component of the gravitational acceleration) to the retarding frictional force (bottom stress times area), we obtain:

$$\text{mass} \ \times \ \text{gravity} \ = \ \text{frictional force}$$

$$\rho LA \quad \times \quad gS \quad = \quad \tau_b LP \ ,$$

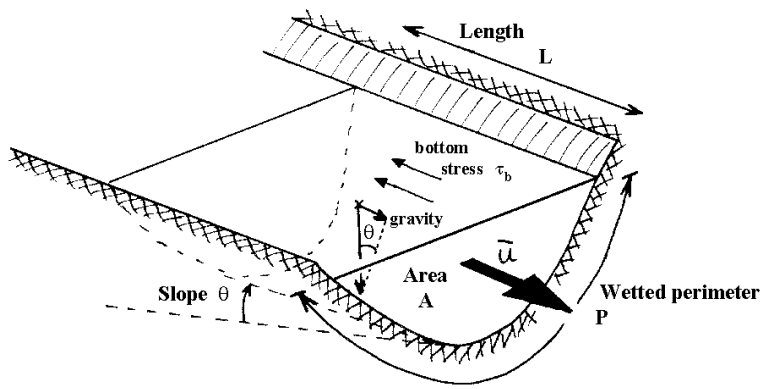

Figure 4-4. Balance of forces in a moving stream.

for a stretch L of the river, where the cross-sectional area is A and the so-called *wetted perimeter* is P (Figure 4-4). We can solve this equation for the bottom stress:

$$\tau_b \;=\; \rho g \frac{A}{P} S \;=\; \rho g R_h S \;. \tag{4.3}$$

where the quantity R_h defined by

$$R_h \;=\; \frac{A}{P} \tag{4.4}$$

is called the *hydraulic radius*. For a wide and shallow river, R_h is nearly equal to the depth H. Finally, replacing this expression for τ_b in Equation (4.2) yields:

$$u_* \;=\; \sqrt{g R_h S}\;, \tag{4.5}$$

where g=9.81 m/s^2 is the gravitational acceleration, R_h=cross-sectional area divided by wetted perimeter is the hydraulic radius, and S is the slope of the river bed.

Numerous observations indicate that the mean velocity $\bar{u}$ of a river is nearly proportional to the turbulent velocity scale. [You can think that the tumbling of vortices causes the mean flow just as a bicycle wheel rolls downhill.] So, we write

$$\bar{u} \;=\; C u_*$$

or

$$\bar{u} \;=\; C\,\sqrt{g R_h S}\;, \tag{4.6}$$

where the value of the dimensionless constant C typically ranges from 10 to 30. In hydraulics, this relation between mean velocity and bottom slope is called the Chézy formula.

The exact value of the coefficient C , or rather $C\sqrt{g}$ since the two constants can be lumped together, depends on the nature of the bottom (e.g., sand, gravel or stones), shape of the cross-section and the tortuosity of the river. The commonly accepted expression, which was obtained from a large number of observations, is:

$$C\sqrt{g} \;=\; \frac{R_h^{1/6}}{n} \;,$$

which leads to a

$$\bar{u} \;=\; \frac{1}{n}\, R_h^{2/3}\, S^{1/2} \;. \tag{4.7}$$

In this expression, R_h is to be expressed in meters to obtain $\bar{u}$ is meters per second. Typical values for n (called the Manning coefficient) range from 0.012 for a very smooth and straight channel to 0.15 for a very rough flood plain. See tabulated values below. [In the absence of information, take n=0.035, which corresponds to a typical river in its natural state.]

CHANNEL TYPE		n
Artificial channels	finished cement	0.012
	unfinished cement	0.014
	brick work	0.015
	rubble masonry	0.025
	smooth dirt	0.022
	gravel	0.025
	with weeds	0.030
	cobbles	0.035
Natural channels	clean and straight	0.030
	most rivers	0.035
	with deep pools	0.040
	irregular sides	0.045
	dense side growth	0.080
Flood plains	farmland	0.035
	small brushes	0.125
	with trees	0.150

Table 4.1 Values of the Manning coefficient for common channels.

Vertical diffusion

We can now return to vertical diffusion. With definition (4.2) for u_*, observations provide the multiplicative constant necessary to complete (4.1) that gives the vertical diffusion coefficient:

$$\begin{aligned} D_{\text{vertical}} &= 0.067\; u_* H \\ &= 0.067\; H\sqrt{g R_h S} \;. \end{aligned} \tag{4.8}$$

Of course, the numerical value 0.067 is not universal. Some published accounts quote values as low as 0.05 and as high as 0.07. The case could also be made that D_{vertical} is not constant but actually varies with depth, being greatest at mid-depth and smallest at top and bottom, because turbulent eddies centered at mid-depth have the most vertical room and are thus the most efficient mixing agents. Expression (4.8) represents the most commonly accepted formula.

For a discharge at mid-depth, the time taken to achieve nearly complete mixing from top to bottom in the river is:

$$\begin{aligned} t_{\text{vertical}} &= 0.134\ \frac{H^2}{D_{\text{vertical}}} \\ &= 2.0\ \frac{H}{u_*}\ . \end{aligned} \tag{4.9}$$

During that time, the distance traveled downstream is

$$\begin{aligned} x_{\text{vertical}} &= \bar{u} t_{\text{vertical}} \\ &= 2.0\ \frac{\bar{u} H}{u_*}\ . \end{aligned} \tag{4.10}$$

Transverse diffusion

Transverse (or lateral) diffusion, which acts across the current between the left and right banks of the river, is accomplished by transverse vortices that are spun off from the vortices aligned with the flow (Figure 4-5). The controlling length scale remains the depth H, but because rivers are typically wider than they are deep, transverse vortices can be somewhat elongated, and the numerical coefficient is larger for transverse diffusion than for vertical diffusion:

$$\begin{aligned} D_{\text{transverse}} &= 0.15\ u_* H \\ &= 0.15\ H \sqrt{g R_h S}\ . \end{aligned} \tag{4.11}$$

However, the numerical value of the coefficient is less precisely known than for vertical diffusion, because it depends to some extent on the channel width, sidewall irregularities, river meandering, and numerous other factors. For example, sidewall irregularities can increase the value to 0.4 and, if the river is slowly meandering, the secondary transverse circulation generated by centrifugal forces can cause the coefficient to reach 0.6.

Most often, discharges into rivers occur along one of the banks. Therefore, the time taken to achieve nearly complete mixing from side to side in the river is given by (2.32):

$$\begin{aligned} t_{\text{transverse}} &= 0.536\ \frac{W^2}{D_{\text{transverse}}} \\ &= 3.6\ \frac{W^2}{u_* H}\ . \end{aligned} \tag{4.12}$$

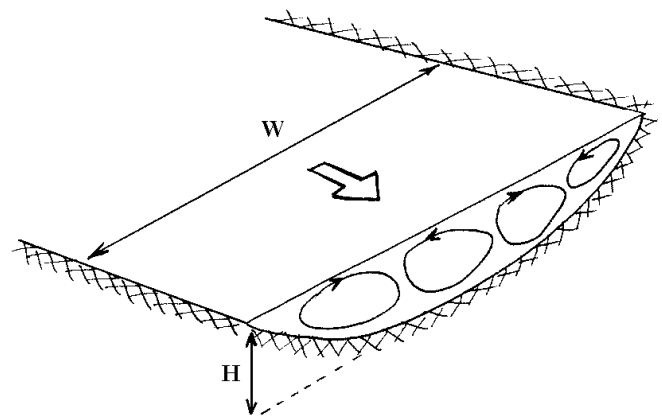

Figure 4-5. Transverse vortices in a river.

During that time, the distance traveled downstream is

$$\begin{aligned} x_{\text{transverse}} &= \bar{u} t_{\text{transverse}} \\ &= 3.6 \, \frac{\bar{u} W^2}{u_* H} \, . \end{aligned} \tag{4.13}$$

Longitudinal diffusion

Finally, longitudinal diffusion is accomplished essentially by shear dispersion, for which a theory was outlined in Chapter 3. The effective diffusion coefficient depends on the velocity profile, from bottom to surface. A fair representation of the velocity profile in a turbulent flow of thickness H in a laterally unbounded domain is

$$u(z) \;=\; \frac{8}{7} \bar{u} \left(\frac{z}{H} \right)^{1/7} \;, \tag{4.14}$$

where $\bar{u}$ is its vertical average. The shear component is

$$\begin{aligned} u'(z) &= u(z) - \bar{u} \\ &= \bar{u} \left[\frac{8}{7} \left(\frac{z}{H} \right)^{1/7} - 1 \right] \, . \end{aligned} \tag{4.15}$$

From this, we can calculate the cumulated shear [see Eq. (3.8)]

$$\begin{aligned} \tilde{u}(z) &= \frac{1}{H} \int_0^z \; u'(z') \; dz' \\ &= \bar{u} \left[\left(\frac{z}{H} \right)^{8/7} \; - \; \frac{z}{H} \right] \end{aligned} \tag{4.16}$$

and the effective diffusivity [see Eqs. (3.9) and (4.8)]

$$\begin{aligned} D_{\text{longitudinal}} &= \frac{H}{D_{\text{vertical}}} \int_0^H \tilde{u}^2(z)\, dz \\ &= 0.0197\, \frac{\bar{u}^2 H}{u_*} \,. \end{aligned} \tag{4.17}$$

If we adopt the default value C=17 for the Chézy coefficient, we obtain $D_{\text{longitudinal}}$ = 5.68 $u_* H$, an expression close to one that has been established by a slightly different method and that has been used in studies of shallow and broad rivers:

$$D_{\text{longitudinal}} = 5.93\, u_* H. \tag{4.18}$$

Lateral friction along the river banks may be significant, and the resulting shearing of the velocity in the transverse horizontal direction can dominate the shear dispersion effect. The most widely accepted formula in such case is:

$$D_{\text{longitudinal}} = 0.011 \frac{\bar{u}^2 W^2}{u_* H} \,, \tag{4.19}$$

where $\bar{u}$ is the average velocity, W is the width, u_* is the turbulent velocity, and $H = A/W$ is the average depth. In practice, the transverse diffusivity is taken as the largest between (4.17) and (4.19).

Example

An industrial plant discharges a conservative substance at one point along the side of a straight river, which is 2-m deep, 50-m wide and has a 0.02% slope. What is the downstream distance where the pollutant begins to affect the opposite side?

To answer this question, we must first calculate the hydraulic radius. Equation (4.4) provides:

$$R_h = \frac{A}{P} = \frac{(2\text{m})(50\text{m})}{(2\text{m}) + (50\text{m}) + (2\text{m})} = 1.85 \text{ m}.$$

From this, the turbulent velocity is determined, using Equation (4.5):

$$\begin{aligned} u_* &= \sqrt{g R_h S} = \sqrt{(9.81\text{m/s}^2)(1.85\text{m})(2 \times 10^{-4})} \\ &= 0.0603 \text{ m/s} = 6.03 \text{ cm/s}. \end{aligned}$$

Using the generic value for the Manning coefficient (n=0.035), we obtain $C\sqrt{g}$=31.7, or C=10.1, and an estimate of the average velocity:

$$\bar{u} = C u_* = (10.1)(0.0603\text{m/s}) = 0.61 \text{ m/s}.$$

The transverse diffusivity is given by (4.11):

$$\begin{aligned} D_{\text{transverse}} &= 0.15\ u_* H \ = \ (0.15)(0.0603\text{m/s})(2\text{m}) \\ &= 0.0181\ \text{m}^2/\text{s}. \end{aligned}$$

By considering one-sided diffusion (from one bank of the river to the opposite side, rather than from middle to both sides), we estimate the width of the pollutant at 2σ. It is equal to the river width W at time t such that

$$W \ = \ 2\sigma \ = \ 2\sqrt{2D_{\text{transverse}}\ t}\ ,$$

which gives

$$\begin{aligned} t &= \frac{W^2}{8D_{\text{transverse}}} \\ &= \frac{(50\text{m})^2}{(8)(0.0181\text{m}^2/\text{s})} \\ &= 17,280\ \text{s} \ = \ 4.80\ \text{hrs}. \end{aligned}$$

Since time traveled becomes distance down the river, we can estimate the downstream distance for such spreading:

$$\begin{aligned} x &= \bar{u}t \ = \ (0.61\text{m/s})(17,280\text{s}) \\ &= 10,530\ \text{m} \ = \ 10.53\ \text{km}. \end{aligned}$$

Thus, the pollutant becomes a problem approximately 11 km downstream of the industrial plant.

4.3 Air-Water Exchanges

Surface chemistry

Wherever water is in contact with air, such as in rivers, ponds, lakes and oceans, a chemical transfer occurs between the two fluids. Some of the water evaporates creating moisture in the atmosphere while some of the air dissolves into the water. Different constituents of air (N_2, O_2, CO_2 etc.) dissolve to different degrees and in amounts that depend on temperature.

At equilibrium, a relation known as Henry's Law exists between the amounts of the gas dissolved in the water and the amount present in the atmosphere:

$$[\text{gas}]_{\text{in water}} \ = \ K_H\ P_{\text{gas in air}} \tag{4.20}$$

which states a proportionality between the concentration of gas dissolved in the water, $[\text{gas}]_{\text{in water}}$ (in moles per liter, M), and the partial pressure of the same gas in the air, $P_{\text{gas in air}}$ (in atmosphere, atm). The coefficient of

proportionality is the so-called Henry's Law constant, K_H (in M/atm). [The partial pressure of a gas species in a gas mixture is the pressure times the mole fraction of that species in the mixture. For example, oxygen is 20.95% of the air on a molar basis and, therefore, P_{O_2} is 20.95% of the atmospheric pressure, or 0.2095 atm under standard conditions.]

Temperature (°C)	Oxygen (M/atm)	Carbon dioxide (M/atm)
0	0.0021812	0.076425
5	0.0019126	0.063532
10	0.0016963	0.053270
15	0.0015236	0.045463
20	0.0013840	0.039172
25	0.0012630	0.033363

Table 4.2 Values of Henry's Law constants for oxygen and carbon dioxide.

Let us apply Henry's Law to dissolved oxygen (DO) in water at two temperatures. At 15°C, Table 4.2 provides $K_H = 0.0015236$ M/atm, which yields under a standard partial pressure of oxygen in the atmosphere equal to 0.2095 atm:

$$[O_2] \;=\; (0.0015236 \text{ M/atm}) \;\times\; (0.2095 \text{ atm}) \;=\; 3.19 \;\times\; 10^{-4}\; M.$$

And, since the molecular weight of the oxygen molecule is $2 \times 16 = 32$ g/mole = 32000 mg/mole, we deduce

$$DO = 32000 \text{ mg/mole} \;\times\; 3.19 \;\times\; 10^{-4} \text{ moles/L} \;=\; 10.21 \text{ mg/L}.$$

Likewise, at 20°C: K_H is 0.0013840 M/atm, leading successively to $[O_2] = 0.0013840 \times 0.2095 = 2.89 \times 10^{-4}$ M and DO $= 32000 \times 2.89 \times 10^{-4} = 9.23$ mg/L.

The preceding values are realized only when an equilibrium is reached between the water and air, which is not always the case. Thus, a distinction must be made between this equilibrium value, called the *saturated value* denoted DO_s, and the actual value, DO. The table below recapitulates the saturated values of dissolved oxygen for various temperatures and under a standard atmospheric pressure.

Temperature (°C)	Oxygen (mg/L)	Temperature (°C)	Oxygen (mg/L)
0	14.6	13	10.6
1	14.2	14	10.4
2	13.8	15	10.2
3	13.5	16	10.0
4	13.1	17	9.7
5	12.8	18	9.5
6	12.5	19	9.4
7	12.2	20	9.2
8	11.9	21	9.0
9	11.6	22	8.8
10	11.3	23	8.7
11	11.1	24	8.5
12	10.8	25	8.4

Table 4.3 Values of saturated dissolved oxygen DO_s as function of temperature, in pure freshwater under standard atmospheric pressure.

Acidity of pristine water

It is also instructive to apply Henry's Law to carbon dioxide (CO_2) because the result provides the acidity of pristine water and natural rain. The case, however, is complicated by the fact that CO_2 reacts in and with water. The first reaction taking place is binding with water to form carbonic acid H_2CO_3 with subsequent decomposition into the bicarbonate ion HCO_3^- and a proton H^+:

$$CO_2 \ + \ H_2O \iff H_2CO_3 \iff HCO_3^- \ + \ H^+$$

The equilibrium constants of these two reactions are:

$$K_1 \ = \ \frac{[H_2CO_3]}{[CO_2]} \ = \ 1.58 \ \times \ 10^{-3} \tag{4.21}$$

$$K_2 \ = \ \frac{[HCO_3^-][H^+]}{[H_2CO_3]} \ = \ 2.83 \ \times \ 10^{-4} \text{ M.} \tag{4.22}$$

And, a second reaction is the further decomposition of HCO_3^- into the carbonate ion CO_3^{--} and another proton:

$$HCO_3^- \iff CO_3^{--} \ + \ H^+$$

The equilibrium constant of this last reaction is

$$K_3 \ = \ \frac{[CO_3^{--}][H^+]}{[HCO_3^-]} \ = \ 4.68 \ \times \ 10^{-11} \text{ M.} \tag{4.23}$$

The atmosphere currently contains 370 ppm (= parts per million, 10^{-6}) of CO_2, corresponding to a partial pressure of $370 \times 10^{-6} = 3.70 \times 10^{-4}$ atm.

At 15°C, the Henry's Law constant is 0.045463 M/atm (see Table 4.2), and the concentration of dissolved undissociated carbon dioxide is $[CO_2] = 0.045463$ M/atm $\times$ 3.70 $\times$ 10^{-4} atm = 1.682 $\times$ 10^{-5} M.

The equilibrium constants yield successively

$$[H_2CO_3] \;=\; K_1[CO_2] \;=\; 2.658 \;\times\; 10^{-8}\ \mathrm{M}$$

$$[HCO_3^-] \;=\; \frac{K_2\ [H_2CO_3]}{[H^+]} \;=\; \frac{7.521 \;\times\; 10^{-12}\ \mathrm{M}^2}{[H^+]}$$

$$[CO_3^{--}] \;=\; \frac{K_3\ [HCO_3^-]}{[H^+]} \;=\; \frac{3.520 \;\times\; 10^{-22}\ \mathrm{M}^3}{[H^+]^2}$$

While these reactions occur, water simultaneously dissociates, as it always does, providing another source or sink of H^+ ions:

$$H_2O \iff OH^- \;+\; H^+$$

with constant of dissociation equal to:

$$K_w \;=\; [OH^-][H^+] \;=\; 10^{-14}\ \mathrm{M}^2.$$

To determine the acidity of the water, we need to calculate the concentration of H^+ ions. This is accomplished by enforcing conservation of electrons, otherwise called the equation of *electroneutrality*. This holds true because the negative ions have acquired electrons at the expense of the positive ions. Thus,

$$[H^+] \;=\; [OH^-] \;+\; [HCO_3^-] \;+\; 2[CO_3^{--}]$$

Replacing the various concentration values in terms of $[H^+]$, we obtain

$$[H^+] \;=\; \frac{10^{-14}\ \mathrm{M}^2}{[H^+]} \;+\; \frac{7.521 \;\times\; 10^{-12}\ \mathrm{M}^2}{[H^+]} \;+\; 2\ \frac{3.520 \;\times\; 10^{-22}\ \mathrm{M}^3}{[H^+]^2}$$

The solution is $[H^+] = 2.74 \times 10^{-6}$ M, and the corresponding pH value is

$$\mathrm{pH} \;=\; -\log_{10}[H^+] \;=\; 5.56. \tag{4.24}$$

Reaeration/Volatization

Henry's Law expresses an equilibrium between air and water, but not all situations are at equilibrium because processes in one medium may skew the situation. An example is the consumption of dissolved oxygen by bacteria in dirty water. The oxygen depletion disrupts the surface equilibrium, and the resulting imbalance draws a flux of new oxygen from the air into the water. In other words, equilibrium corresponds to a state of no net flux between the two fluids, whereas displacement away from equilibrium is characterized by a flux in the direction of restoring the situation toward equilibrium.

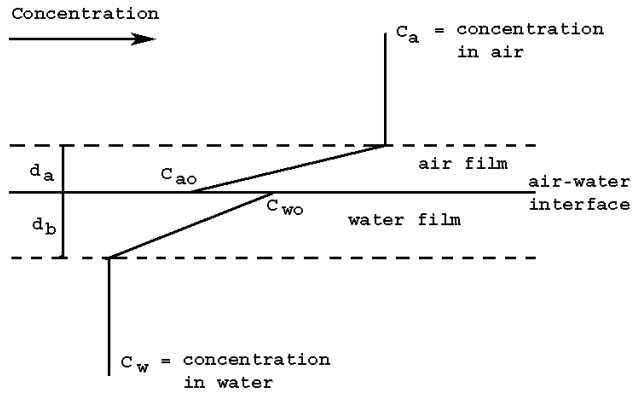

Figure 4-6. The thin-film model at the air-water interface during a situation away from equilibrium.

A useful way of determining the flux in non-equilibrium situation is the so-called *thin-film model*. According to this model, both fluids have thin boundary layers (a few micrometers thick), in which the concentration of the substance under consideration varies from the value inside that fluid rapidly but continually to a value at the interface between the two fluids, as depicted in Figure 4-6.

If we denote by C_a and C_w the air and water concentrations of the substance away from the interface, by C_{ao} and C_{wo} the concentrations at the interface, by d_a and d_w the thicknesses of the film layers, and by D_a and D_b the air and water molecular diffusivities, we can write two statements. First, because there is no accumulation or depletion of the substance at the interface itself, the diffusion flux in the air must exactly match that in the water:

$$j \;=\; D_a \; \frac{C_{ao} - C_a}{d_a} \;=\; D_w \; \frac{C_w - C_{wo}}{d_w} \tag{4.25}$$

Also, instantaneous equilibrium may be assumed at the level of the interface:

$$C_{wo} \;=\; K_H \; P_o \;=\; K_H \; RT \; C_{ao}, \tag{4.26}$$

where P_o is the partial pressure of the substance in the air at the level of the interface. Replacing C_{wo} by this value in (4.25) and solving for C_{ao}, we obtain:

$$C_{ao} \;=\; \frac{d_w D_a C_a \;+\; d_a D_w C_w}{d_w D_a \;+\; d_a D_w K_H RT} \; .$$

Substitution in either expression of the flux j yields:

$$j \quad = \quad \frac{D_a D_w}{d_w D_a \;+\; d_a D_w K_H RT} \; (C_w \;-\; K_H RT C_a)$$

$$= \frac{1}{\frac{d_w}{D_w} + \frac{d_a}{D_a} K_H RT} (C_w - K_H P), \tag{4.27}$$

where P is the partial pressure of the substance in the air away from the interface. The result is that the flux is proportional to the departure $(C_w - K_H P)$ from equilibrium. Lumping the front fraction as a single coefficient of reaeration k_r, we write:

$$j = k_r (C_w - K_H P). \tag{4.28}$$

Naturally, this flux is in the direction of restoration toward equilibrium. If the concentration in the water is less than at equilbrium $(C_w < K_H P)$, then the flux is negative $(j < 0)$, meaning downward from air into water, and vice versa if the concentration in the water exceeds that of equilibrium $(C_w > K_H P \rightarrow j > 0)$, or upward from water into the air.

In the particular case of oxygen, equilibrium is achieved at saturation, when the actual dissolved oxygen DO equals the maximum, saturated amount DO_s. Thus, the reaeration flux is expressed in terms of the oxygen deficit:

$$k_r (DO_s - DO),$$

which is counted positive if the water is taking oxygen from the air. Because it has dimensions of a speed, the coefficient k_r is sometimes called the *piston velocity*, evoking the idea that the oxygen is being pushed down, as it were, from the air into the water.

The preceding expression is on a per-area, per-time basis. To obtain the rate of oxygen intake, we multiply by the area A_s of the water surface exposed to the air:

$$R = A_s k_r (DO_s - DO). \tag{4.29}$$

The coefficient of reaeration k_r depends on temperature. The formula most often used is

$$k_r(\text{at } T) = k_r(\text{at } 20°\text{C})\ 1.024^{T-20}\ , \tag{4.30}$$

where T is here the temperature in degrees Celsius. The value at the reference temperature of 20°C depends on the degree of agitation (turbulence) in the water, which in turns depends on the speed and depth of the river. A useful empirical formula is

$$k_r(\text{at } 20°\text{C}) = 3.9 \left(\frac{\bar{u}}{H}\right)^{1/2}\ , \tag{4.31}$$

In this formula, which is dimensionally inconsistent, the stream velocity $\bar{u}$ and depth H must be expressed in m/s and m, respectively, to obtain the k_r value in m/day. In most applications, the reaeration coefficient has to be divided by the water depth, and some authors define the ratio

$$K_r = \frac{k_r}{H} \tag{4.32}$$

as the reaeration coefficient. The accompanying table lists typical values of this ratio.

Stream type	K_r at 20°C (in 1/day)
Sluggish river	0.23–0.35
Large river of low velocity	0.35–0.46
Large stream of normal velocity	0.46–0.49
Swift streams	0.69–1.15
Rapids and waterfalls	> 1.15

Table 4.4 Typical values of the reaeration coefficient for various streams. [From Peavy, Rowe and Tchobanoglous, 1985, p.87]

4.4 Dissolved Oxygen

Biological oxygen demand

By far the most important characteristic determining the quality of a river or stream is its dissolved oxygen. While the saturated value DO_s is rarely achieved, a stream can nonetheless be considered healthy as long as its dissolved oxygen DO exceeds 5 mg/L. Below 5 mg/L, most fish, especially the more desirable species such as trout, do not survive. Actually, trout and salmon need at least 8 mg/L during their embryonic and larval stages and the first 30 days after hatching.

Except for pathogens, organic matter in water is generally not harmful in and of itself but may be considered as a pollutant because its bacterial decomposition generates a simultaneous oxygen depletion. Indeed, bacteria that feed on organic matter consume oxygen as part of their metabolism, just as we humans need to both eat and breathe. The product of the decomposition is generally cellular material and carbon dioxide. The more organic matter is present, the more bacteria feed on it, and the greater the oxygen depletion. For this reason, the amount of organic matter is directly related to oxygen depletion, and it is useful to measure the quantity of organic matter not in terms of its own mass but in terms of the mass of oxygen it will have removed by the time it is completely decomposed by bacteria. This quantity is called the *Biochemical Oxygen Demand* and noted BOD. Like disolved oxygen DO, it is expressed in mg/L. BOD values can be extremely large in comparison to levels of dissolved oxygen. For example, BOD of untreated domestic sewage generally exceeds of 200 mg/L and drops to 20–30 mg/L after treatment in a conventional wastewater treatment facility (Table 4.5). Still, a value of 20 mg/L is high in

comparison to the maximum, saturated value of dissolved oxygen (no more than 8 to 12 mg/L). This implies that even treated sewage must be diluted, lest it completely depletes the receiving stream from its oxygen.

Sewage type	*BOD* (in mg/L)
Untreated – low	100
Untreated – average	250
Untreated – high	400
After primary treatment	80 to 120
After primary and secondary treatment	30 or less

Table 4.5 Typical BOD values of sewage.

Should the *BOD* of a waste be excessive and the *DO* value reach zero, the absence of oxygen causes an anaerobic condition, in which the oxygen-demanding bacteria die off and are replaced by an entirely different set of non-oxygen-demanding bacteria, called anaerobic bacteria. The by-product of their metabolism is methane (CH_4) and hydrogen sulfide (H_2S), both of which are gases that escape to the atmosphere and of which the latter is malodorous. Needless to say, such condition is to be avoided at all cost!

Under normal, aerobic conditions, organic matter decays at a rate proportional to its amount, that is, the decay rate of *BOD* is proportional to the *BOD* value. Thus, we write:

$$\frac{d\ BOD}{dt} = -K_d\ BOD, \tag{4.33}$$

where K_d is the decay constant of the organic matter. Since by definition, *BOD* is the amount of oxygen that is potentially depleted, every milligram of *BOD* that is decayed entrains a loss of one milligram of dissolved oxygen. Therefore, the accompanying decay of *DO* is:

$$\frac{d\ DO}{dt} = -K_d\ BOD, \tag{4.34}$$

Like the reaeration coefficient, the decay coefficient depends on temperature. The formula most often used is

$$K_d(\text{at } T) = K_d(\text{at } 20^\circ\text{C})\ 1.047^{T-20}\ , \tag{4.35}$$

where T is here the temperature in degrees Celsius. The value at the reference temperature of 20°C depends on the nature of the waste. The accompanying table lists a few common values.

Waste type	K_d at 20°C (in 1/day)
Raw domestic sewage	0.35–0.70
Treated domestic sewage	0.12–0.23
Pollutted river water	0.12–0.23

Table 4.6 Typical values of the decay coefficient for various types of wastes. [From Davis and Cornwell, 1991]

Oxygen sag curve

Let us now consider a river in which a BOD-laden discharge is introduced. Downstream of that point, the decay of BOD is accompanied by a consumption of DO, which in turn creates an increasing deficit of dissolved oxygen. But, as the oxygen deficit grows, so does the reaeration rate, according to (4.29). At some point downstream, reaeration is capable of overcoming the loss due to BOD decomposition, which gradually slows down as there is increasingly less BOD remaining. The net result is a variation of dissolved oxygen downstream of the discharge that first decays and then reccovers, with a minimum somewhere along the way. Plotting the DO value as a function of the downstream distance yields a so-called oxygen-sag curve.

Because the worst water condition occurs where the dissolved oxygen is at its lowest, it is important to determine the location of the minimum, if any, and its value. For this purpose, let us model the river as a one-dimensional system, with uniform volumetric flowrate Q along the downstream direction x measured from the point of discharge ($x = 0$). The 1D assumption presupposes relatively rapid vertical and transverse mixing of the discharge. Let us further assume that the situation is in steady state (constant discharge and stream properties unchanging over time), and that the flow is sufficiently swift to create a highly advective situation, so that we may neglect diffusion in the downstream direction.

We establish the BOD and DO budgets for a slice dx of the river, as depicted in Figure 4-7. The volume of this slice is $V = Adx$ and the surface exposed to the air is $A_s = Wdx$, where A is the river's cross-sectional area and W its width.

In steady state, there is no accumulation or depletion, and the BOD budget demands that the downstream export be the upstream import minus the local decay, namely:

$$Q\ BOD(x + dx) \ = \ Q\ BOD(x) \ - \ K_d\ V\ BOD.$$

Using $V = Adx$ and re-arranging, we can write:

$$Q\ \frac{BOD(x + dx) - BOD(x)}{dx} \ = \ -\ K_d\ A\ BOD.$$

In the limit of a short slice, the difference on the left-hand side becomes a derivative in x, and since $Q = A\bar{u}$, by definition of the average velocity, a division by A yields:

$$\bar{u}\ \frac{d}{dx} BOD \ = \ -\ K_d\ BOD. \tag{4.36}$$

The solution is

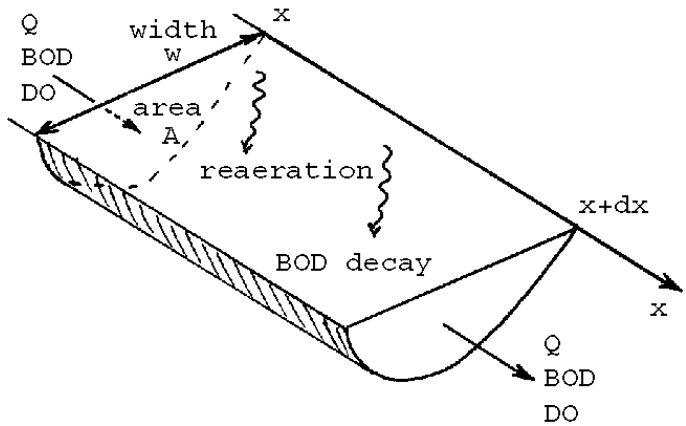

Figure 4-7. Dissolved oxygen and BOD budgets in a stretch of a transversely well mixed river.

$$BOD(x) \;=\; BOD_o \;\exp\left(-\frac{K_d\;x}{\bar{u}}\right)\;, \tag{4.37}$$

where BOD_o is the value of the biochemical oxygen demand of the waste discharged at x=0.

Similarly, the budget of dissolved oxygen consists in balancing the downstream export plus the local decay with the upstream import and the local reaeration:

$$Q\;DO(x+dx) \;+\; K_d\;V\;BOD \;=\; Q\;DO(x) \;+\; k_r\;A_s\;(DO_s - DO).$$

Using $V = Adx$ and $A_s = Wdx$ and re-arranging the terms, we obtain

$$Q\;\frac{DO(x+dx) - DO(x)}{dx} \;=\; k_r W\;(DO_s - DO) \;-\; K_d\;A\;BOD.$$

In the limit of a short slice, the differential equation is:

$$\bar{u}\;\frac{d}{dx}DO \;=\; \frac{k_r W}{A}\;(DO_s - DO) \;-\; K_d\;BOD.$$

Next, we recall $A/W = H$ (the cross-sectional area of the river divided by its width is the average depth) and $k_r/H = K_r$, and we also substitute for BOD the solution given by (4.37):

$$\bar{u}\;\frac{d}{dx}DO \;=\; K_r\;(DO_s - DO) \;-\; K_d\;BOD_o\;\exp\left(-\frac{K_d\;x}{\bar{u}}\right)\;. \tag{4.38}$$

The solution is

$$\begin{aligned} DO(x) &= \frac{K_d\ BOD_o}{K_d\ -\ K_r}\left[\exp\left(-\frac{K_d\ x}{\bar{u}}\right)\ -\ \exp\left(-\frac{K_r\ x}{\bar{u}}\right)\right] \\ &- \ (DO_s - DO_o)\ \exp\left(-\frac{K_r\ x}{\bar{u}}\right)\ +\ DO_s, \end{aligned} \tag{4.39}$$

where DO_o is the level of dissolved oxygen at the discharge point, which may or may not be equal to the saturated value DO_s. The first term represents the effect of the BOD consumption, while the second represents the recovery toward saturation from a possible prior deficit.

As anticipated earlier, the function $DO(x)$ may reach a minimum (Figure 4-8). Setting the derivative of DO with respect to x equal to zero and solving for the critical value x_c, we obtain:

$$x_c\ =\ \frac{\bar{u}}{K_r - K_d}\ \ln\left\{\frac{K_r}{K_d}\left[1\ -\ \frac{(K_r - K_d)(DO_s - DO_o)}{K_d\ BOD_o}\right]\right\}. \tag{4.40}$$

This is the distance downstream from the discharge to the location where the lowest dissolved oxygen occurs. At that location, the BOD decay rate exactly balances the reaeration rate, so that there is no local change in the amount of dissolved oxygen. Note that an x_c value may not exist if the expression inside the logarithm is negative. This occurs when the upstream oxygen deficit $DO_s - DO_o$ is relatively large compared to the BOD_o loading, in which case the dissolved oxygen simply recovers from its initial deficit without passing through a minimum anywhere downstream.

There is a useful simplification in the case when the stream has no prior oxygen deficit ($DO_s - DO_o = 0$). The expression for the critical distance reduces to:

$$x_c\ =\ \frac{\bar{u}}{K_r - K_d}\ \ln\left(\frac{K_r}{K_d}\right), \tag{4.41}$$

which, we note, is independent of the loading BOD_o and always exists. The ratio K_r/K_d has been called the *self-purification* ratio.

Once the critical distance x_c is determined, the minimum value $DO_{\min}$ of the dissolved oxygen is found by substitution of (4.40) or (4.41), whichever applies, into (4.39). No mathematical expression is written down here because it is extremely cumbersome. In practice, numerical values are used before the substitution.

Mathematically, it may happen that $DO_{\min}$ falls below zero, which is physically impossible. Should this be the case, the dissolved oxygen reaches zero before a minimum is reached [at an x location found by setting expression (4.39) to zero], and $DO = 0$ exists further downstream. Over this stretch of the stream, the BOD no longer decays according to (4.36–37) because there is not enough oxygen, and the formalism leading to the budget (4.38) no longer

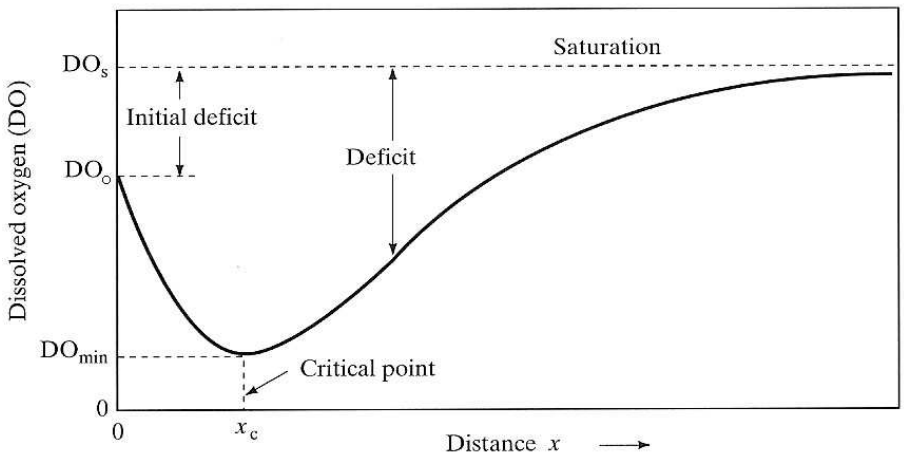

Figure 4-8. The oxygen-sag curve showing the initial decay of dissolved oxygen under pollutant loading and subsequent recovery by reaeration. [Figure adapted from Masters, 1998]

holds. Instead, the reaeration rate, then equal to $K_r DO_s$, limits the BOD consumption, and if anaerobic degradation can be neglected, we may write that the BOD decay is exactly the rate of reaeration:

$$\bar{u}\ \frac{d}{dx} BOD \ = \ -\ K_r\ DO_s. \tag{4.42}$$

and BOD decays linearly according to

$$BOD(x) \ = \ BOD(x_1) \ - \ \frac{K_r DO_s}{\bar{u}}\ (x - x_1), \tag{4.43}$$

where x_1 is the value where DO first falls to zero. The dissolved oxygen remains at zero until the BOD has fallen to a value where it begins to decay less fast, that is, at a distance x_2 where its rate is capable of returning to the rate prescribed by (4.36):

$$\begin{aligned} -K_r\ DO_s \ &= \ -K_d\ BOD(x_2) \\ &= \ -K_d[BOD(x_1) \ - \ \frac{K_r DO_s}{\bar{u}}\ (x_2 - x_1)]. \end{aligned}$$

The solution is

$$x_2 \ = \ x_1 \ + \ \frac{\bar{u}}{K_d}\ \left[\frac{K_d BOD(x_1)}{K_r DO_s} \ - \ 1\right]. \tag{4.44}$$

Beyond this point, the aerobic degradation resumes, and the problem can simply be considered as one with no initial oxygen ($DO_o = 0$) and the remaining BOD amount ($BOD_o = BOD(x_2) = K_r DO_s / K_d$).

The previous model tacitly assumed that the only oxygen demands on the river are the BOD of the discharge and any prior oxygen deficit. In actual rivers, sediments may cause a significant additional oxygen demand, because many forms of river pollution contain suspended solids (SS) that gradually settle along the river bed, spreading over a long distance, and subsequently decay. In heavily polluted rivers, this sediment oxygen demand (SOD) can be in the range 5–10 mg/(m^2.day) along the surface of the channel bed. In budget (4.38), the sediment oxygen demand appears as a sink term on the left-hand side equal to $-SOD/H$, and solution (4.39) needs to be amended, but this is beyond our scope.

4.5 Sedimentation and Erosion

Physical processes

Rivers and stream carry material in the form of solid particles that may alternatively be deposited on the river bed (sedimentation) and entrained back into the moving water (erosion). Such material may be contaminated, and therefore one pollution transport mechanism in a river is by sedimentation and erosion.

Studies have shown that the entrainment of a solid particle lying on the bed into the flow depends primarily on the size of the particle and the stress exerted by the moving water onto the bed. A particle of diameter d is entrained into the flow when the bottom stress τ_b exceeds a critical value. The greater the particle diameter, the stronger the stress must be. According to Equation (4.3), the bottom stress is given by

$$\tau_b \;=\; \rho g R_h S,$$

where the quantity R_h is the hydraulic radius. For a wide and shallow river, R_h is nearly equal to the depth H, and we have approximately

$$\tau_b \;\simeq\; \rho g H S,$$

which is a more practical quantity because depth is far easier to determine than the hydraulic radius. Further, since the constant g is universal, tradition is to drop it from the preceding expression and to write more succintly

$$T \;=\; \frac{\tau_b}{g} \;=\; \rho H S. \tag{4.45}$$

The quantity T is called the *tractive force* (which is a misleading expression because it is not a force but a mass per area). Figure 4-9 shows how the diameter of the particles that erode depends on the tractive force.

The relationship is not unique but there is some scatter, because underlying factors are present, such as particle shape and density. If one adopts the line that bisects the gray zone of scatter, one obtains the diameter d of the particle

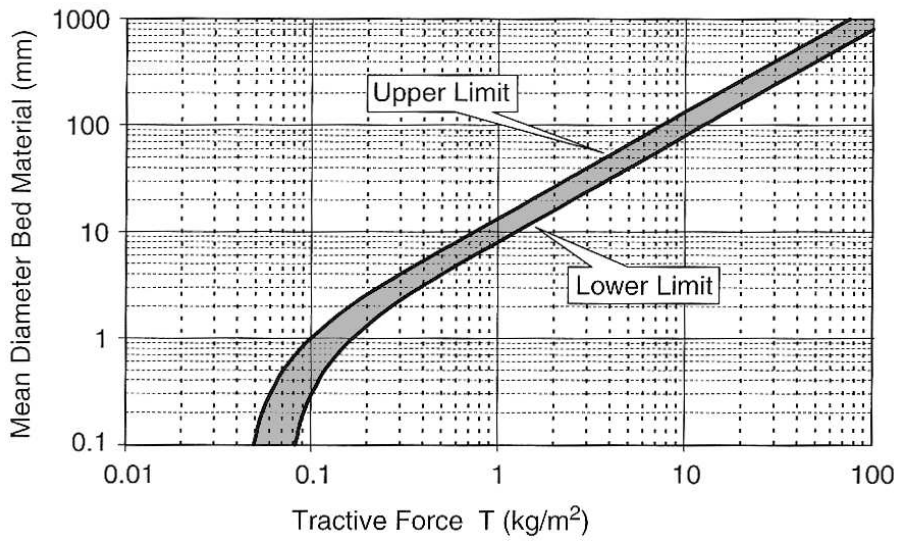

Figure 4-9. Relation between the tractive force on a stream bed and the size of the bed material that will erode. [From Ward and Trimble, 2004]

that has a 50% chance of being entrained into the stream. For a tractive force exceeding 0.2 kg/m^2, the relationship is very nearly linear, and we can use the simple proportionality

$$d \;=\; 12.9\,\frac{u_*^2}{g} \qquad \text{for} \qquad T \;>\; 0.2\ \text{kg/m}^2. \tag{4.46}$$

Because the mean stream velocity $\bar{u}$ is intimately related to the bottom stress, via Equation (4.6) [$\bar{u} = C\sqrt{\tau_b/\rho}$] and hence also to the tractive force, one can recast the preceding plot in terms of particle diameter and stream velocity. The result is the so-called Hjulstrom diagram (Figure 4-10), which also shows the settling (fall) velocity.

The amount of sediment transported by the stream, if any, is called the *wash load*, *suspended load*, or simply *bedload*. The load is carried downstream by a combination of sliding, rolling and bouncing (called *saltation*). The volumetric bedload discharge q_s can be determined by the Meyer–Peter–Muller equation:

$$\frac{q_s}{\sqrt{g' d_{50}^3}} \;=\; \left(\frac{4u_*^2}{g' d_{50}} \;-\; 0.188\right)^{3/2}, \tag{4.47}$$

where q_s is expressed in m^3/s per unit width of channel, d_{50} is the median particle size (in m), u_* is the friction velocity defined in (4.2) (in m/s), and g' is the gravitational acceleration experienced by the particles, defined as

$$g' \;=\; \frac{\rho_{\text{solid}} - \rho_{\text{water}}}{\rho_{\text{water}}}\, g, \tag{4.48}$$

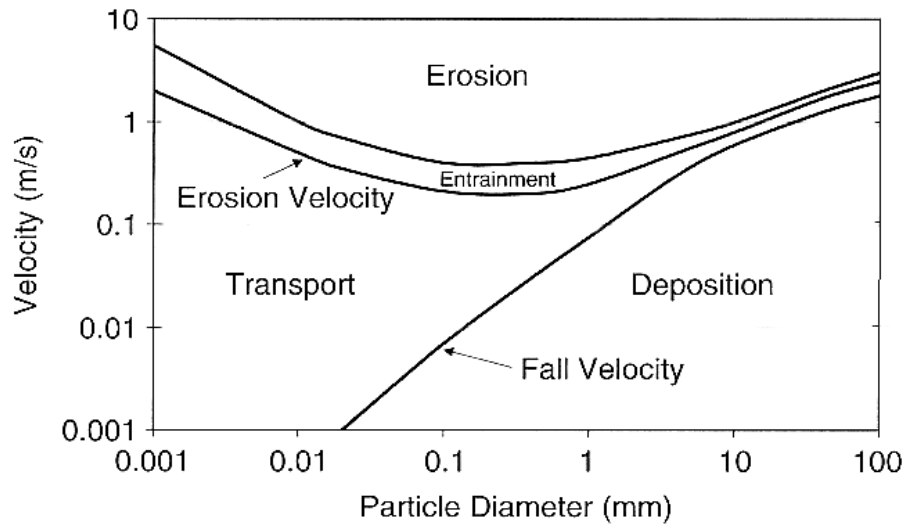

Figure 4-10. Hjulstrom diagram relating flow velocity and bed material size to erosion, entrainment, transport and deposition. [From Ward and Trimble, 2004]

which includes the discount due to buoyancy. Since the density of solid particles is typically $\rho_{\text{solid}} = 2650$ kg/m^3 (value for quartz and, therefore, sand), $g' = 1.65\ g = 16.19$ m/s^2. For the total bedload transport expressed as mass per time conveyed by the stream, one needs to multiply the preceding expression for q_s by the width of the river and the solid density.

The expression quoted here for bedload transport is traditional, but it is actually only one among many alternatives, all based on differing models.

Application

Text to be added later.

Chapter 5

NEXT CHAPTER

THIS IS TO ENSURE THAT CHAPTER 4 ENDS ON AN EVEN PAGE SO THAT CHAPTER 5 CAN BEGIN ON AN ODD PAGE.